Single
Packs

Single Pack KLF4.0CNT 200-240V 50Hz 208-230V 60Hz LS CSIR

Single pack code number: **195B4838**

Position	Title	Code	Amount
1	Compressor KLF4.0CNT	106H2409	1
2	Starting capacitor (80µF 220V, 6.3mm)	117U5001	1
3	Starting relay (QLZ-4.6A, overload protector T1252/L6)	117U7085	1
4	KL accessories	103N1060	1
5	Bolt joint for one compressor | M6 | ø16mm	118-1917	1

Secop GmbH • Lise-Meitner-Straße 29 • 24941 Flensburg, Germany • Tel: +49 461 4941 0 • **www.secop.com**

Secop accepts no responsibility for possible errors in catalogs, brochures, and other printed material. Secop reserves the right to alter its products without notice. This also applies to products already on order provided that such alterations can be made without subsequential changes being necessary to specifications already agreed. All trademarks in this material are the property of the respective companies. Secop and the Secop logotype are trademarks of Secop GmbH. All rights reserved.

Model
KLF4.0CNT

Sales code:
106H2409

Compressor Data

Refrigerant(s)	**R290**
Refr. charge - tech. limit	**200g / 7.05oz**
Weight	**8.90 kg / 19.62lbs**
Displacement	**4.00 cm3 / 0.24cu.in**
Compressors on pallet	**100**



General – Configurations With KLF4.0CNT

–	Conf. 1	Conf. 2	Conf. 3	Conf. 4
Motor configuration	CSIR	RSCR	CSIR	RSCR
Power supply (nominal)	200-240 V/50 Hz	200-240 V/50 Hz	208-230 V/60 Hz	208-230 V/60 Hz
Number of phases	1	1	1	1
Voltage range	187-254 V	187-254 V	195-253 V	187-253 V
Approvals	UL, VDE	UL, VDE	UL, VDE	UL, VDE
Starting torque	HST	LST	HST	LST
Refrigerant	R290	R290	R290	R290
Application	LBP+MBP	LBP+MBP	LBP+MBP	LBP+MBP
Hot gas defrost	OK	OK	OK	OK
Long interval pull down	OK	OK	OK	OK

Application Notes

- Compressor with low height version.
- Provision for PE Grounding is located at the PE Stamp on the compressor

Model
KLF4.0CNT

Sales code:
106H2409

Compressor Design

Oil type	**POE**	Winding resistance main	**13.1 Ohm**
Oil viscosity	**19,2cSt**	Winding resistance aux	**25.3 Ohm**
Oil quantity	**170 / 5.75fl.oz**	Max. winding temp.	**125 °C**
Free gas volume comp.	**1,630 cm3 / 55.12fl.oz**	Max. discharge temp.	**130°C / 266°F**
Motor protection	**external**		

Compressor Dimensions

Housing

A Height	**174mm / 6.85in**
B Height	**167mm / 6.57in**
C Length shell	**194mm / 7.64in**
D Length w. cover	**235.1mm / 9.26in**
E Width	**151mm / 5.94in**

Find 3D Model here

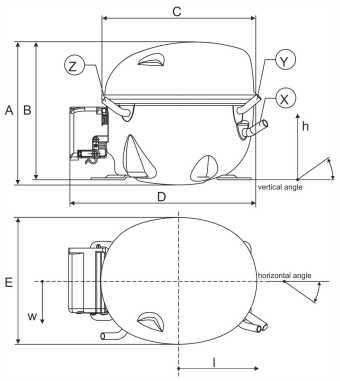

Connectors	Suction X	Discharge Y	Process Z
Diameter [mm]	øi 8.11–8.29 / 0.32–0.33in	øi 6.11–6.29 / 0.24–0.25in	øi 6.11–6.29 / 0.24–0.25in
Material	CU	CU	CU
Horizontal angle ±2°	35°	13°	0°
Vertical angle ±2°	30°	40°	145°
Position l/h/w [mm]	119/73/59 / 4.69/2.87/2.32in	114/107/63 / 4.49/4.21/2.48in	-87/101/71 / -3.43/3.98/2.80in
Straight tube l. [mm]	13.5 / 0.53in	13.5 / 0.53in	13.5 / 0.53in

Mounting Accessories

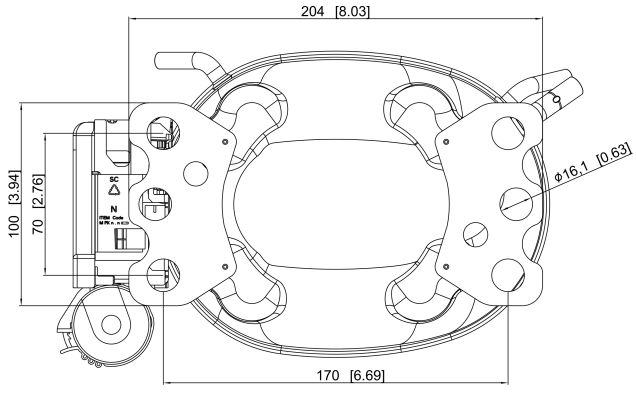

Dimensions in mm [in]

Bolt joint

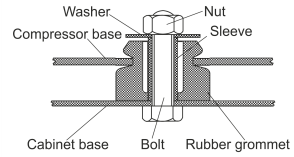

Snap-on

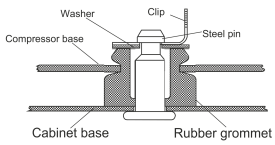

	one comp.	multi pack
Bolt joint | M6 | ø16mm	118-1917	118-1918
Bolt joint | ø1/4" | ø16mm	118-1946	–
Snap-on | ø7,3 | ø16mm	118-1947	118-1919

Model
KLF4.0CNT Configuration 1

Sales code:
106H2409

Configuration

Motor configuration	**CSIR**
Power supply (nominal)	**200-240 V/50 Hz 1~**
Refrigerant	**R290**
Application	**LBP+MBP**
Voltage range	**187-254 V**
Starting torque	**HST**
Approvals	**UL, VDE**
Starting device type	**relay**
Run capacitor	**-/-**
Start capacitor	**80 µF**
LRA (locked rotor amps / 4s/ U(N))	**10.2 A**
RLA (rated load amps / 1s/ U(N))	**1.4 A**
Cut in current (U(N))	**12.65 A**

Ambient/ machine room temperatures minimum /maximum
Ambient temperature range: 10 - 43°C / 50 - 109°F
Machine room temp. compressor: 10 - 48°C / 50 - 118°F

System Cooling
fan 3m/s

Electrical Accessories / Wiring Diagram

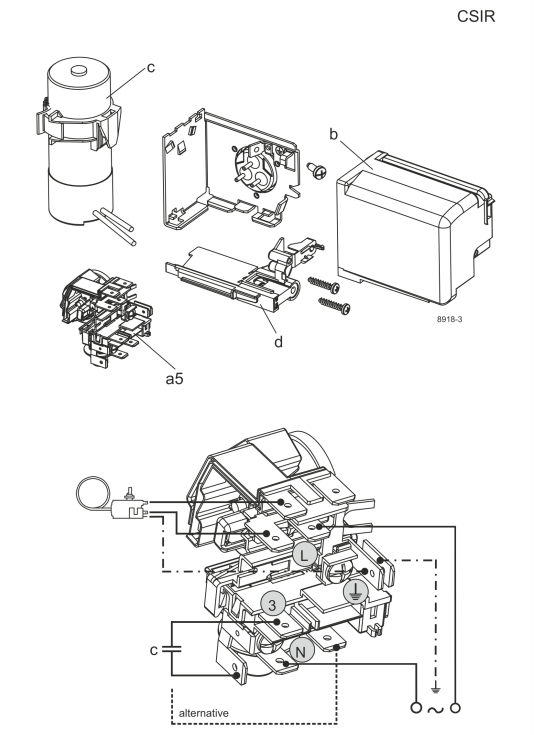

View full size

Components
a5 current relay (T1252/L6) 117U7085
c start capacitor (80µF, 6.3mm) 117U5001
b, d cover + clamp + screws (5VA-compl.) 103N0600

Alternative components
b, d 100x cover + clamp + screws (5VA) 103N2060
b, d cover + clamp + screws (5VA) in bag 103N1060

Operation Pressure Range

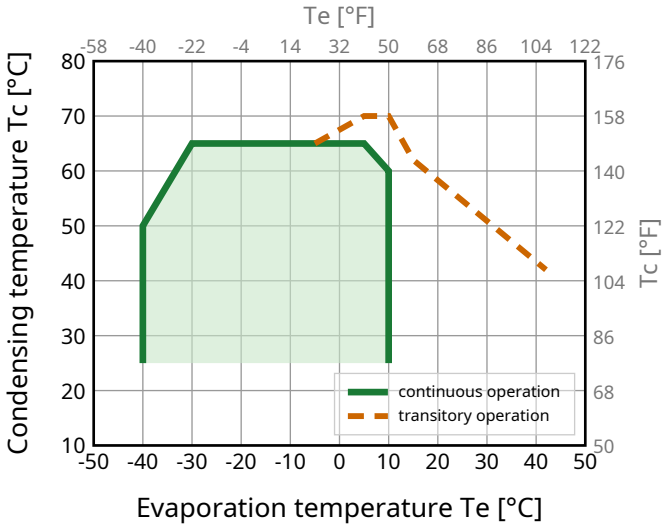

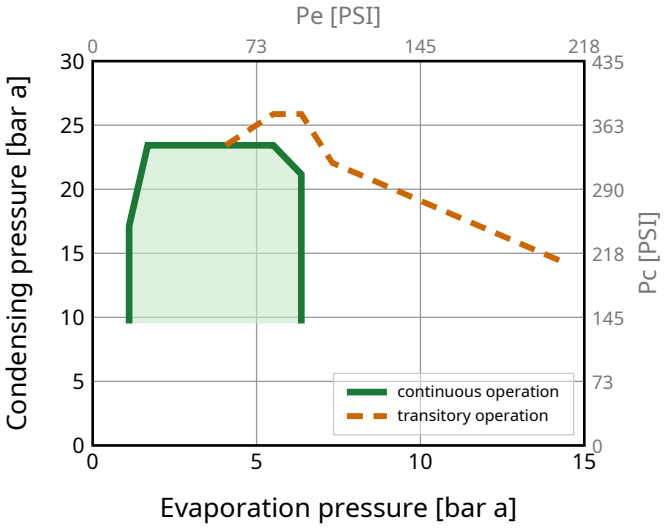

Model
KLF4.0CNT Configuration 1

Sales code:
106H2409

Standard Conditions

R290, 220 V/50 Hz, CSIR, fan 3m/s

pe	pc	RGT	Tliq	Cooling capacity			COP	EER	P	I	ṁ	
[°C] [°F]	[°C] [°F]	[°C] [°F]	[°C] [°F]	[W]	[Btu/h]	[kcal/h]	[W/W]	[Btu/Wh]	[W]	[A]	[kg/h]	
-23.3 -10	54.4 129.9	32.2 90	32.2 90	**190**	648	163	**1.55**	5.28	123	0.95	1.93	**ASHRAE LBP**
-25 -13	55 131	32 89.6	55 131	**140**	476	120	**1.18**	4.02	118	0.95	1.75	**CECOMAF LBP**
-35 -31	40 104	20 68	40 104	**102**	349	88	**1.15**	3.92	89	1.01	1.17	**EN12900 LBP**
-6.7 20	54.4 129.9	35 95	46.1 115	**357**	1217	307	**2.12**	7.25	168	1.02	4.08	**ASHRAE MBP**
-10 14	55 131	32 89.6	55 131	**282**	961	242	**1.76**	6.01	160	1.00	3.58	**CECOMAF MBP**
-10 14	45 113	20 68	45 113	**314**	1070	270	**2.14**	7.32	146	0.98	3.86	**EN12900 MBP**

Performance Tables

R290, 220 V/50 Hz, CSIR, fan 3m/s

pc= 45/113 | RGT= 32/89.6 | Tliq= 45/113 | °C/°F

pe		Cooling capacity			COP	EER	P	I	ṁ
[°C]	[°F]	[W]	[Btu/h]	[kcal/h]	[W/W]	[Btu/Wh]	[W]	[A]	[kg/h]
-40	-40	**66**	224	56	**0.80**	2.74	82	1.05	0.74
-30	-22	**128**	437	110	**1.26**	4.31	102	0.97	1.45
-20	-4	**213**	727	183	**1.72**	5.85	124	0.95	2.42
-10	14	**326**	1113	281	**2.23**	7.61	146	0.98	3.75
0	32	**473**	1614	407	**2.88**	9.84	164	1.01	5.50
10	50	**659**	2249	567	**3.80**	12.96	174	1.04	7.79

pc= 55/131 | RGT= 32/89.6 | Tliq= 55/131 | °C/°F

-40	-40	**46**	157	40	**0.54**	1.84	85	1.04	0.57
-30	-22	**104**	355	89	**0.98**	3.35	106	0.96	1.30
-20	-4	**181**	616	155	**1.37**	4.67	132	0.96	2.27
-10	14	**282**	961	242	**1.76**	6.01	160	1.00	3.58
0	32	**413**	1409	355	**2.22**	7.58	186	1.07	5.33
10	50	**580**	1979	499	**2.82**	9.62	206	1.13	7.62

Model Sales code:

KLF4.0CNT Configuration 2 **106H2409**

Configuration

Motor configuration	**RSCR**
Power supply (nominal)	**200-240 V/50 Hz 1~**
Refrigerant	**R290**
Application	**LBP+MBP**
Voltage range	**187-254 V**
Starting torque	**LST**
Approvals	**UL, VDE**
Starting device type	**PTC**
Run capacitor	**5 µF**
Start capacitor	**-/-**
LRA (locked rotor amps / 4s/ U(N))	**10.2 A**
RLA (rated load amps / 1s/ U(N))	**1.4 A**
Cut in current (U(N))	**12.65 A**

Ambient/ machine room temperatures minimum /maximum
Ambient temperature range: 10 - 43°C / 50 - 109°F
Machine room temp. compressor: 10 - 48°C / 50 - 118°F

System Cooling
fan 3m/s

Electrical Accessories / Wiring Diagram

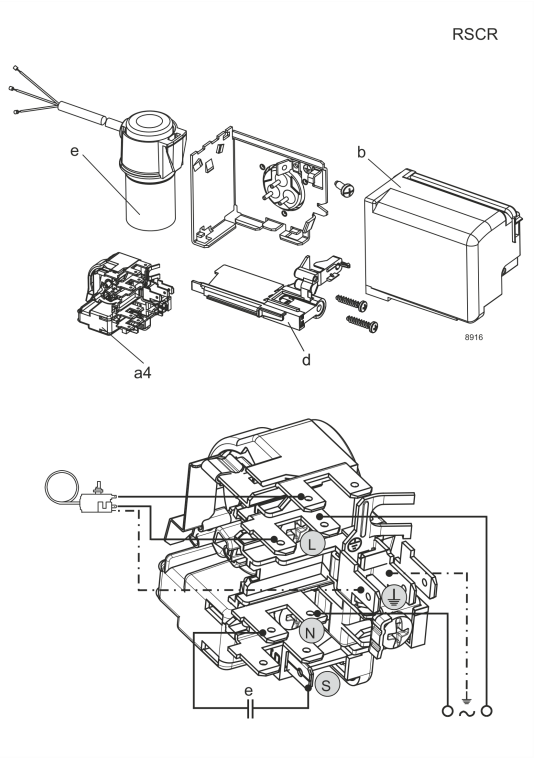

View full size

Components
a4 DAS12 (PTC,4.8mm, T1252/L6 - S12) 103N0259
e run capacitor (5µF, 6,3mm) 117-7155
e1 retaining clamp 103N0535
b, d cover + clamp + screws (5VA-compl.) 103N0600

Alternative components
b, d 100x cover + clamp + screws (5VA) 103N2060
b, d cover + clamp + screws (5VA) in bag 103N1060

Operation Pressure Range

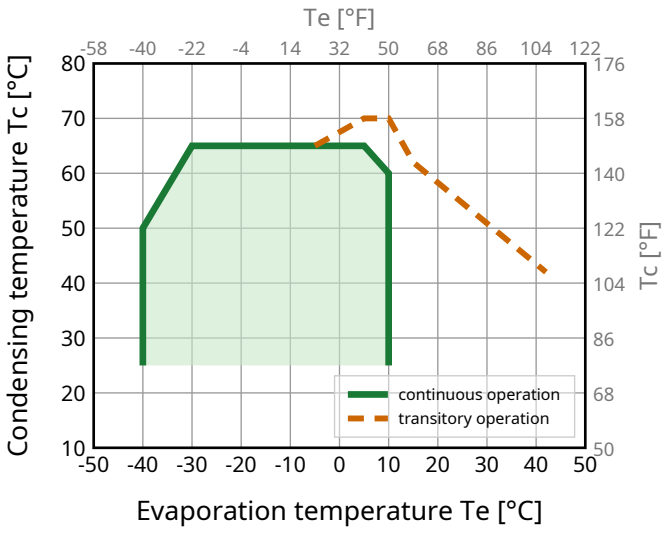

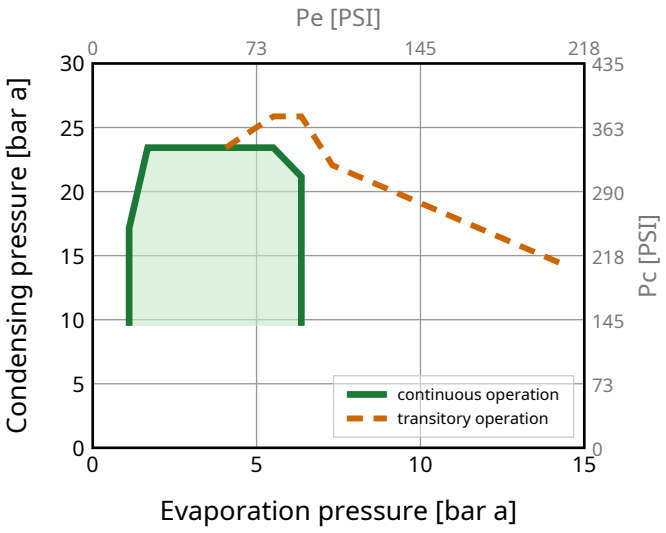

Model
KLF4.0CNT Configuration 2

Sales code:
106H2409

Standard Conditions

R290, 220 V/50 Hz, RSCR, fan 3m/s

pe	pc	RGT	Tliq	Cooling capacity			COP	EER	P	I	ṁ	
[°C] [°F]	[°C] [°F]	[°C] [°F]	[°C] [°F]	[W]	[Btu/h]	[kcal/h]	[W/W]	[Btu/Wh]	[W]	[A]	[kg/h]	
-23.3 -10	54.4 129.9	32.2 90	32.2 90	**190**	649	163	**1.60**	5.48	118	0.73	1.93	**ASHRAE LBP**
-25 -13	55 131	32 89.6	55 131	**140**	477	120	**1.22**	4.16	115	0.72	1.75	**CECOMAF LBP**
-35 -31	40 104	20 68	40 104	**102**	349	88	**1.18**	4.01	87	0.62	1.17	**EN12900 LBP**
-6.7 20	54.4 129.9	35 95	46.1 115	**358**	1221	308	**2.23**	7.60	161	0.89	4.10	**ASHRAE MBP**
-10 14	55 131	32 89.6	55 131	**282**	964	243	**1.84**	6.30	153	0.86	3.59	**CECOMAF MBP**
-10 14	45 113	20 68	45 113	**314**	1073	270	**2.24**	7.64	140	0.81	3.87	**EN12900 MBP**

Performance Tables

R290, 220 V/50 Hz, RSCR, fan 3m/s

pc= 45/113 | RGT= 32/89.6 | Tliq= 45/113 | °C/°F

pe		Cooling capacity			COP	EER	P	I	ṁ
[°C]	[°F]	[W]	[Btu/h]	[kcal/h]	[W/W]	[Btu/Wh]	[W]	[A]	[kg/h]
-40	-40	**66**	224	57	**0.82**	2.79	80	0.60	0.74
-30	-22	**128**	438	110	**1.30**	4.44	99	0.67	1.45
-20	-4	**214**	728	184	**1.78**	6.07	120	0.74	2.43
-10	14	**327**	1115	281	**2.33**	7.94	140	0.81	3.75
0	32	**474**	1618	408	**3.02**	10.31	157	0.87	5.51
10	50	**661**	2255	568	**3.99**	13.61	166	0.91	7.82

pc= 55/131 | RGT= 32/89.6 | Tliq= 55/131 | °C/°F

-40	-40	**46**	157	40	**0.55**	1.88	84	0.62	0.57
-30	-22	**104**	355	90	**1.01**	3.45	103	0.68	1.30
-20	-4	**181**	618	156	**1.42**	4.86	127	0.76	2.28
-10	14	**282**	964	243	**1.84**	6.30	153	0.86	3.59
0	32	**414**	1413	356	**2.34**	7.98	177	0.95	5.34
10	50	**582**	1985	500	**2.97**	10.15	196	1.02	7.65

Model
KLF4.0CNT Configuration 3

Sales code:
106H2409

Configuration

Motor configuration	**CSIR**
Power supply (nominal)	**208-230 V/60 Hz 1~**
Refrigerant	**R290**
Application	**LBP+MBP**
Voltage range	**195-253 V**
Starting torque	**HST**
Approvals	**UL, VDE**
Starting device type	**relay**
Run capacitor	**-/-**
Start capacitor	**80 µF**
LRA (locked rotor amps / 4s/ U(N))	**10.2 A**
RLA (rated load amps / 1s/ U(N))	**1.4 A**
Cut in current (U(N))	**12.65 A**

Ambient/ machine room temperatures minimum /maximum
Ambient temperature range: 10 - 43°C / 50 - 109°F
Machine room temp. compressor: 10 - 48°C / 50 - 118°F

System Cooling
fan 3m/s

Electrical Accessories / Wiring Diagram

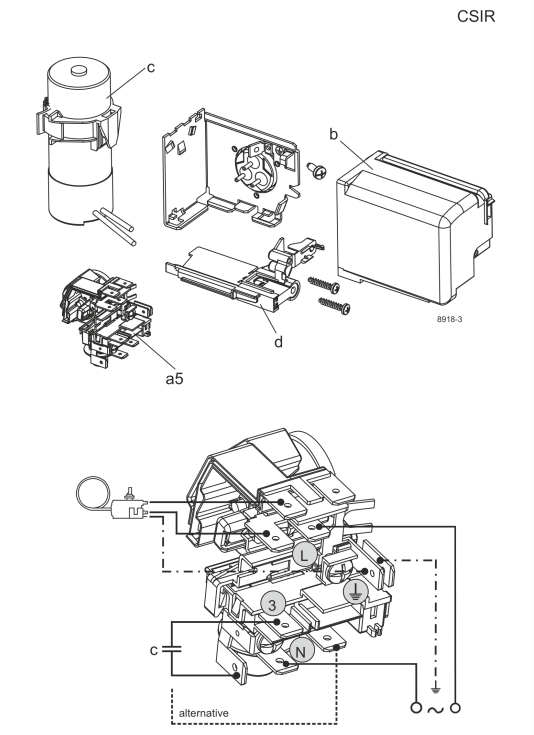

View full size

Components
a5 current relay (T1252/L6) 117U7085
c start capacitor (80µF, 6.3mm) 117U5001
b, d cover + clamp + screws (5VA-compl.) 103N0600

Alternative components
b, d 100x cover + clamp + screws (5VA) 103N2060
b, d cover + clamp + screws (5VA) in bag 103N1060

Operation Pressure Range

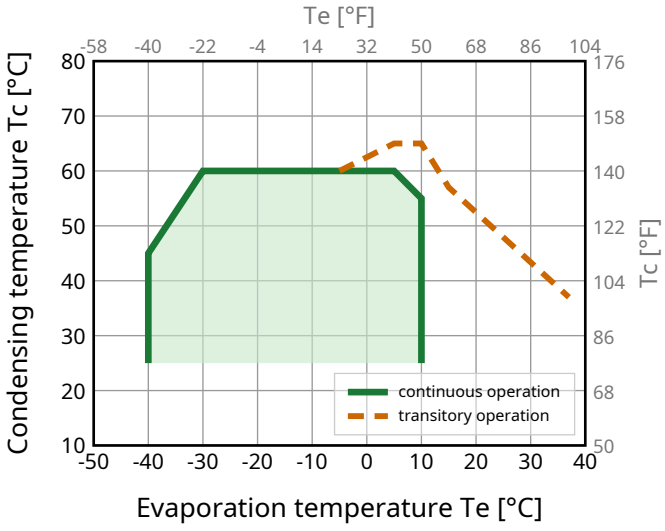

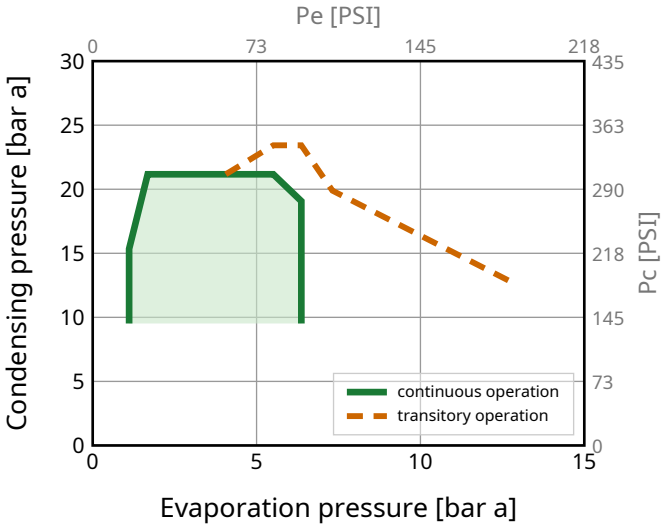

Model
KLF4.0CNT Configuration 3

Sales code:
106H2409

Standard Conditions

R290, 230 V/60 Hz, CSIR, fan 3m/s

pe	pc	RGT	Tliq	Cooling capacity			COP	EER	P	I	ṁ	
[°C] [°F]	[°C] [°F]	[°C] [°F]	[°C] [°F]	[W]	[Btu/h]	[kcal/h]	[W/W]	[Btu/Wh]	[W]	[A]	[kg/h]	
-23.3 -10	54.4 129.9	32.2 90	32.2 90	**237**	808	204	**1.64**	5.58	145	0.98	2.40	**ASHRAE LBP**
-25 -13	55 131	32 89.6	55 131	**176**	599	151	**1.25**	4.27	140	0.97	2.20	**CECOMAF LBP**
-35 -31	40 104	20 68	40 104	**130**	444	112	**1.27**	4.34	102	0.94	1.49	**EN12900 LBP**
-6.7 20	54.4 129.9	35 95	46.1 115	**425**	1451	366	**2.18**	7.43	195	1.12	4.87	**ASHRAE MBP**
-10 14	55 131	32 89.6	55 131	**338**	1154	291	**1.81**	6.18	186	1.09	4.30	**CECOMAF MBP**
-10 14	45 113	20 68	45 113	**373**	1271	320	**2.22**	7.58	168	1.03	4.59	**EN12900 MBP**

Performance Tables

R290, 230 V/60 Hz, CSIR, fan 3m/s

pc= 45/113 | RGT= 32/89.6 | Tliq= 45/113 | °C/°F

pe		Cooling capacity			COP	EER	P	I	ṁ
[°C]	[°F]	[W]	[Btu/h]	[kcal/h]	[W/W]	[Btu/Wh]	[W]	[A]	[kg/h]
-40	-40	**89**	302	76	**0.92**	3.15	96	0.95	1.00
-30	-22	**161**	550	139	**1.37**	4.66	118	0.94	1.82
-20	-4	**258**	881	222	**1.80**	6.15	143	0.98	2.94
-10	14	**387**	1322	333	**2.31**	7.88	168	1.03	4.45
0	32	**555**	1895	478	**2.97**	10.12	187	1.09	6.46
10	50	**769**	2624	661	**3.90**	13.32	197	1.13	9.10

pc= 55/131 | RGT= 32/89.6 | Tliq= 55/131 | °C/°F

-40	-40	**66**	227	57	**0.64**	2.19	104	0.95	0.83
-30	-22	**135**	459	116	**1.06**	3.63	126	0.95	1.68
-20	-4	**223**	760	192	**1.43**	4.89	155	1.00	2.80
-10	14	**338**	1154	291	**1.81**	6.18	186	1.09	4.30
0	32	**488**	1664	419	**2.26**	7.72	215	1.19	6.29
10	50	**678**	2315	584	**2.85**	9.73	238	1.27	8.92

Model
KLF4.0CNT Configuration 4

Sales code:
106H2409

Configuration

Motor configuration	**RSCR**
Power supply (nominal)	**208-230 V/60 Hz 1~**
Refrigerant	**R290**
Application	**LBP+MBP**
Voltage range	**187-253 V**
Starting torque	**LST**
Approvals	**UL, VDE**
Starting device type	**PTC**
Run capacitor	**5 µF**
Start capacitor	**-/-**
LRA (locked rotor amps / 4s/ U(N))	**10.2 A**
RLA (rated load amps / 1s/ U(N))	**1.4 A**
Cut in current (U(N))	**12.65 A**

Ambient/ machine room temperatures minimum /maximum
Ambient temperature range: 10 - 43°C / 50 - 109°F
Machine room temp. compressor: 10 - 48°C / 50 - 118°F

System Cooling
fan 3m/s

Electrical Accessories / Wiring Diagram

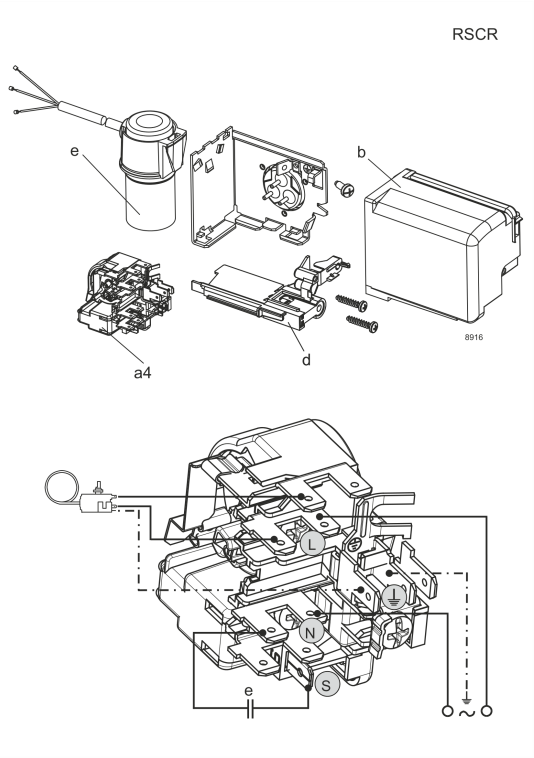

View full size

Components
a4 DAS12 (PTC,4.8mm, T1252/L6 - S12) 103N0259
e run capacitor (5µF, 6,3mm) 117-7155
e1 retaining clamp 103N0535
b, d cover + clamp + screws (5VA-compl.) 103N0600

Alternative components
b, d 100x cover + clamp + screws (5VA) 103N2060
b, d cover + clamp + screws (5VA) in bag 103N1060

Operation Pressure Range

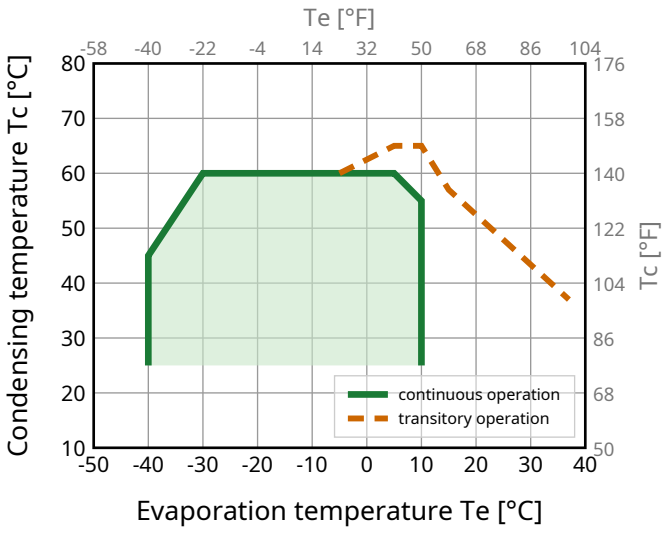

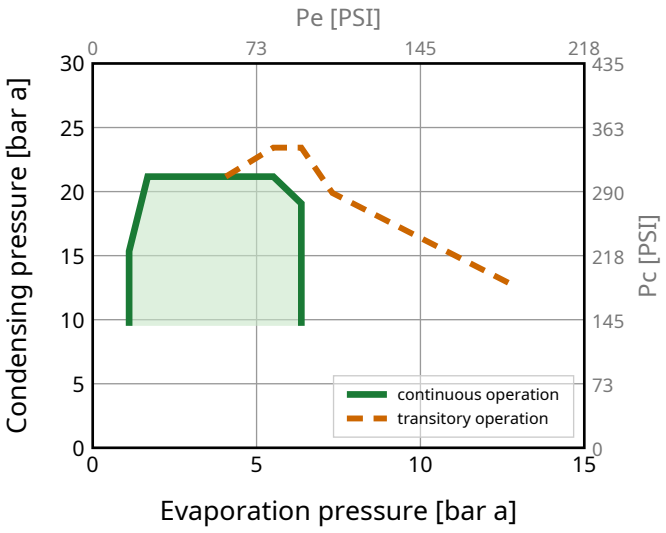

Model
KLF4.0CNT Configuration 4

Sales code:
106H2409

Standard Conditions

R290, 230 V/60 Hz, RSCR, fan 3m/s

pe	pc	RGT	Tliq	Cooling capacity			COP	EER	P	I	ṁ	
[°C] [°F]	[°C] [°F]	[°C] [°F]	[°C] [°F]	[W]	[Btu/h]	[kcal/h]	[W/W]	[Btu/Wh]	[W]	[A]	[kg/h]	
-23.3 -10	54.4 129.9	32.2 90	32.2 90	**237**	809	204	**1.68**	5.74	141	0.83	2.41	**ASHRAE LBP**
-25 -13	55 131	32 89.6	55 131	**176**	601	151	**1.28**	4.38	137	0.82	2.21	**CECOMAF LBP**
-35 -31	40 104	20 68	40 104	**130**	444	112	**1.27**	4.34	102	0.69	1.49	**EN12900 LBP**
-6.7 20	54.4 129.9	35 95	46.1 115	**426**	1455	367	**2.28**	7.79	187	1.01	4.88	**ASHRAE MBP**
-10 14	55 131	32 89.6	55 131	**339**	1157	292	**1.90**	6.47	179	0.98	4.31	**CECOMAF MBP**
-10 14	45 113	20 68	45 113	**374**	1274	321	**2.31**	7.87	162	0.91	4.60	**EN12900 MBP**

Performance Tables

R290, 230 V/60 Hz, RSCR, fan 3m/s

pc= 45/113 | RGT= 32/89.6 | Tliq= 45/113 | °C/°F

pe		Cooling capacity			COP	EER	P	I	ṁ
[°C]	[°F]	[W]	[Btu/h]	[kcal/h]	[W/W]	[Btu/Wh]	[W]	[A]	[kg/h]
-40	-40	**89**	303	76	**0.92**	3.13	97	0.67	1.00
-30	-22	**161**	550	139	**1.38**	4.72	117	0.74	1.82
-20	-4	**259**	883	223	**1.85**	6.33	140	0.83	2.94
-10	14	**388**	1325	334	**2.40**	8.19	162	0.91	4.46
0	32	**557**	1900	479	**3.10**	10.59	179	0.98	6.47
10	50	**771**	2632	663	**4.10**	13.99	188	1.02	9.12

pc= 55/131 | RGT= 32/89.6 | Tliq= 55/131 | °C/°F

-40	-40	**67**	228	57	**0.64**	2.19	104	0.70	0.83
-30	-22	**135**	460	116	**1.08**	3.70	124	0.77	1.68
-20	-4	**223**	762	192	**1.48**	5.06	151	0.87	2.81
-10	14	**339**	1157	292	**1.90**	6.47	179	0.98	4.31
0	32	**489**	1669	421	**2.39**	8.15	205	1.08	6.31
10	50	**681**	2324	586	**3.03**	10.33	225	1.17	8.95

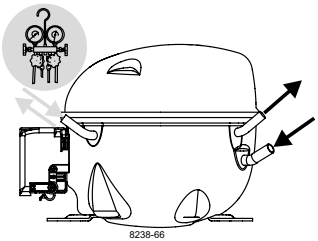

KL Compressors

SECOP

Keep electrical equipment clear from oil, chemicals, and water

When operated with a flammable refrigerant, only spark-proof starting equipment is allowed.

RSIR

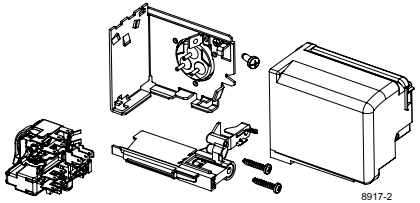

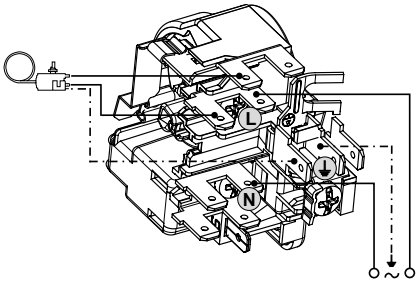

RSCR

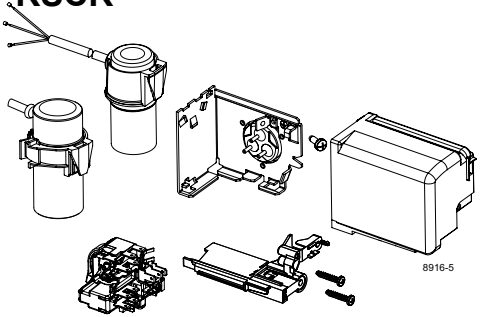

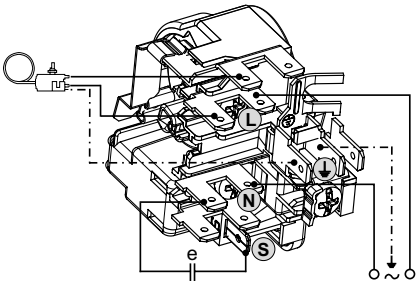

CSIR

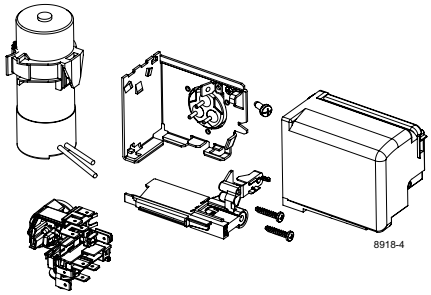

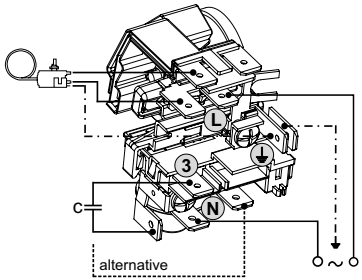

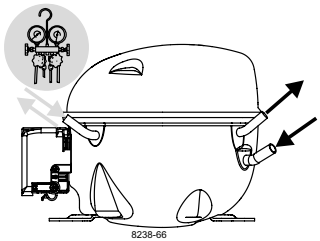

KL Compressors

SECOP

Keep electrical equipment clear from oil, chemicals, and water

When operated with a flammable refrigerant, only spark-proof starting equipment is allowed.

Service/Repair – R290, R600a, R170, R1270, R1234yf

(applies to all flammable refrigerants)



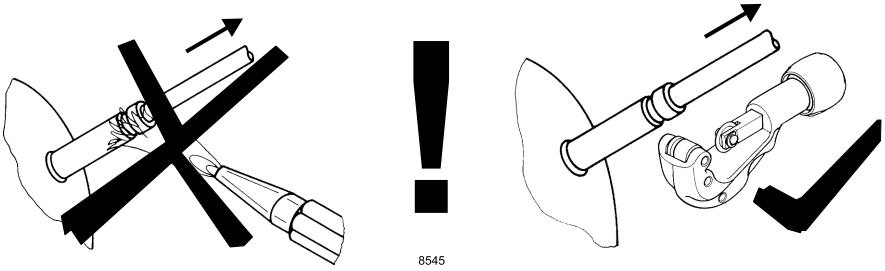

Dismantling, recycling, disposal: At the end of a compressor's lifecycle, proceed by separating and storing components according to their environmental impact. Parts that may cause pollution must be clearly identified and handled separately, ensuring appropriate disposal. Refrigerant gas must not be released into the environment and should be recovered by qualified operators. Compressor oil must also be collected separately. The compressor should be disposed of at specialized disposal centers in accordance with the applicable regulations. **Subject to modifications/alterations. www.secop.com**