Single
Packs

Single Pack SC21G 220-240V 50/60Hz CSCR

Single pack code number: **195B4840**

Position	Title	Code	Amount
1	Compressor SC21G	104G8148	1
2	SC starting device (550mm)	117-7039	1
3	Cord relief	103N1004	1
4	Cover	103N2008	1
5	Snap-on in quantities | ø7,3 | ø16mm	118-1919	1

Secop GmbH • Lise-Meitner-Straße 29 • 24941 Flensburg, Germany • Tel: +49 461 4941 0 • **www.secop.com**

Secop accepts no responsibility for possible errors in catalogs, brochures, and other printed material. Secop reserves the right to alter its products without notice. This also applies to products already on order provided that such alterations can be made without subsequential changes being necessary to specifications already agreed. All trademarks in this material are the property of the respective companies. Secop and the Secop logotype are trademarks of Secop GmbH. All rights reserved.

Model
SC21G

Sales code:
104G8148

Compressor Data

Refrigerant(s)	**R1234yf / R513A**
Refr. charge - tech. limit	**1300g / 45.86oz**
Weight	**13.60 kg / 29.98lbs**
Displacement	**20.95 cm3 / 1.28cu.in**
Compressors on pallet	**80**



General – Configurations With SC21G

–	**Conf. 1**	**Conf. 2**	**Conf. 3**	**Conf. 4**
Motor configuration	CSCR	CSCR	CSCR	CSCR
Power supply (nominal)	220-240 V/50 Hz	208-230 V/60 Hz	220-240 V/50 Hz	220-240 V/60 Hz
Number of phases	1	1	1	1
Voltage range	198-254 V	198-253 V	187-254 V	198-253 V
Approvals	UL	UL	UL	UL
Starting torque	HST	HST	HST	HST
Refrigerant	R1234yf	R1234yf	R513A	R513A
Application	LBP+MBP+HBP	LBP	LBP+MBP+HBP	LBP
Hot gas defrost	OK	OK	OK	OK
Long interval pull down	OK	OK	OK	OK

Application Notes

- Provision for PE Grounding is located at the PE Stamp on the compressor

Model
SC21G

Sales code:
104G8148

Compressor Design

Oil type	**POE**	Winding resistance main	**3.5 Ohm**
Oil viscosity	**22cSt**	Winding resistance aux	**13 Ohm**
Oil quantity	**550 cm3 / 18.60fl.oz**	Max. winding temp.	**125 °C**
Free gas volume comp.	**1,460 cm3 / 49.37fl.oz**	Max. discharge temp.	**130°C / 266°F**
Motor protection	**internal**		

Compressor Dimensions

Housing

A Height	**219mm / 8.62in**
B Height	**213mm / 8.39in**
C Length shell	**218mm / 8.58in**
D Length w. cover	**255mm / 10.04in**
E Width	**151mm / 5.94in**

Find 3D Model here

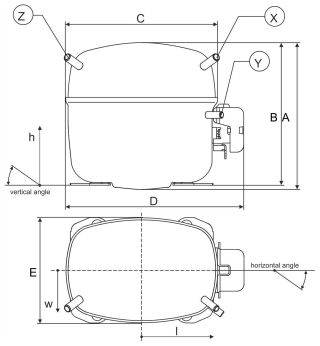

Connectors	Suction X	Discharge Y	Process Z
Diameter [mm]	øi 10.11–10.29 / 0.40–0.41in	øi 6.11–6.29 / 0.24–0.25in	øi 6.11–6.29 / 0.24–0.25in
Material	CU	CU	CU
Horizontal angle ±2°	37°	37°	143°
Vertical angle ±2°	30°	0°	150°
Position l/h/w [mm]	107/193/55 / 4.21/7.60/2.17in	115/110/63 / 4.53/4.33/2.48in	-107/193/55 / -4.21/7.60/2.17in
Straight tube l. [mm]	12 / 0.47in	12 / 0.47in	12 / 0.47in

Mounting Accessories

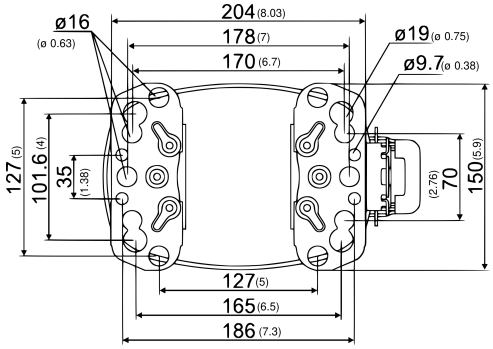

Dimensions in mm [in]

Bolt joint

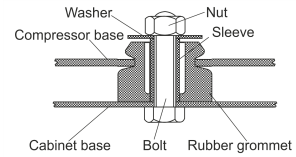

Snap-on

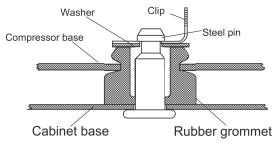

	one comp.	multi pack
Bolt joint | M6 | ø16mm	118-1917	118-1918
Bolt joint | ø1/4" | ø16mm	118-1946	–
Bolt joint | ø1/4" | ø19mm	118-1949	–
Snap-on | ø7,3 | ø16mm	118-1947	118-1919

Model
SC21G Configuration 1

Sales code:
104G8148

Configuration

Motor configuration	**CSCR**
Power supply (nominal)	**220-240 V/50 Hz 1~**
Refrigerant	**R1234yf**
Application	**LBP+MBP+HBP**
Voltage range	**198-254 V**
Starting torque	**HST**
Approvals	**UL**
Starting device type	**relay**
Run capacitor	**10 µF**
Start capacitor	**80 µF**
LRA (locked rotor amps / 4s/ U(N))	**22 A**
RLA (rated load amps / 1s/ U(N))	**3.9 A**
Cut in current (U(N))	**22 A**

Ambient/ machine room temperatures minimum /maximum
Ambient temperature range: 10 - 43°C / 50 - 109°F
Machine room temp. compressor: 10 - 48°C / 50 - 118°F

System Cooling
fan 3m/s

Electrical Accessories / Wiring Diagram

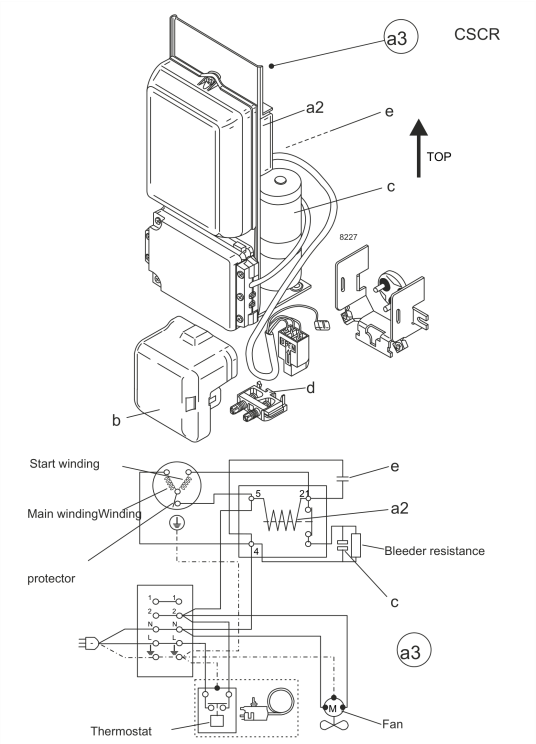

View full size

Components
a3 SC starter kit (550mm) 117-7039
b plastic cover 103N2008
d cord relief 103N1004

Alternative components
a3 SC starter kit (1000mm) 117-7043

Operation Pressure Range

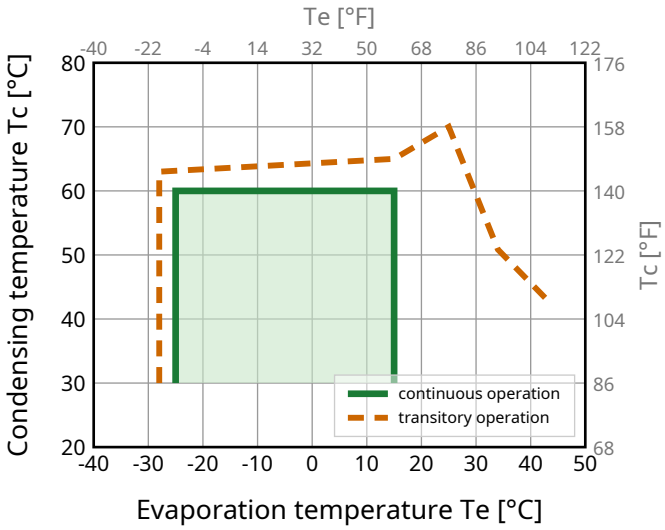

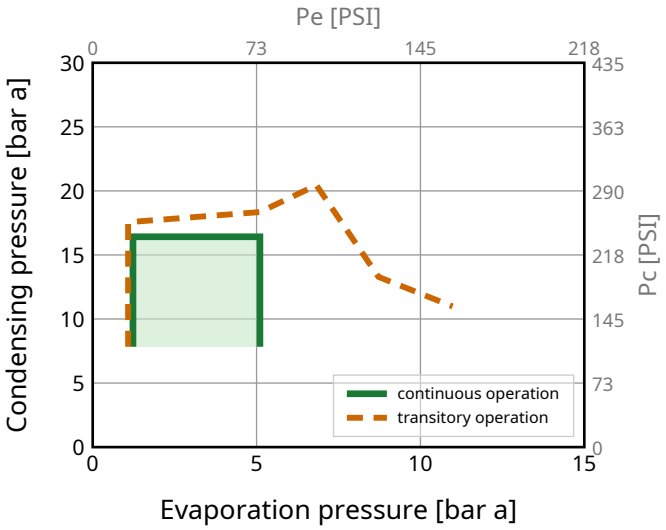

Model Sales code:

SC21G Configuration 1 **104G8148**

Standard Conditions

R1234yf, 220 V/50 Hz, CSCR, fan 3m/s

pe	pc	RGT	Tliq	Cooling capacity			COP	EER	P	I	ṁ	
[°C] [°F]	[°C] [°F]	[°C] [°F]	[°C] [°F]	[W]	[Btu/h]	[kcal/h]	[W/W]	[Btu/Wh]	[W]	[A]	[kg/h]	
-23.3 -10	54.4 129.9	32.2 90	32.2 90	**508**	1735	437	**1.27**	4.35	399	2.35	11.97	**ASHRAE LBP**
-6.7 20	54.4 129.9	35 95	46.1 115	**1048**	3576	901	**1.68**	5.73	625	3.19	28.31	**ASHRAE MBP**
7.2 45	54.4 129.9	35 95	46.1 115	**1838**	6270	1580	**2.38**	8.12	772	3.82	50.60	**ASHRAE HBP**
-35 -31	40 104	20 68	40 104	**250**	855	215	**0.91**	3.12	274	1.99	6.86	**EN12900 LBP**
-10 14	45 113	20 68	45 113	**925**	3155	795	**1.59**	5.43	582	3.02	27.41	**EN12900 MBP**
5 41	50 122	20 68	50 122	**1526**	5206	1312	**2.06**	7.03	741	3.69	49.52	**EN12900 HBP**

Performance Tables

R1234yf, 220 V/50 Hz, CSCR, fan 3m/s

pc= 45/113 | RGT= 32/89.6 | Tliq= 45/113 | °C/°F

pe		Cooling capacity			COP	EER	P	I	ṁ
[°C]	[°F]	[W]	[Btu/h]	[kcal/h]	[W/W]	[Btu/Wh]	[W]	[A]	[kg/h]
-25	-13	**453**	1545	389	**1.13**	3.85	401	2.35	12.15
-20	-4	**599**	2045	515	**1.29**	4.41	464	2.57	16.13
-10	14	**979**	3341	842	**1.68**	5.74	582	3.02	26.59
0	32	**1476**	5035	1269	**2.17**	7.40	680	3.42	40.56
10	50	**2089**	7129	1797	**2.80**	9.54	747	3.71	58.39
15	59	**2440**	8326	2099	**3.19**	10.88	765	3.79	68.94

pc= 55/131 | RGT= 32/89.6 | Tliq= 55/131 | °C/°F

-25	-13	**355**	1211	305	**0.95**	3.26	372	2.26	10.75
-20	-4	**470**	1604	404	**1.06**	3.62	443	2.50	14.29
-10	14	**788**	2689	678	**1.36**	4.63	581	3.02	24.19
0	32	**1224**	4176	1053	**1.74**	5.94	702	3.52	38.09
10	50	**1778**	6067	1529	**2.23**	7.63	795	3.92	56.39
15	59	**2100**	7164	1806	**2.54**	8.66	827	4.05	67.40

Model
SC21G Configuration 2

Sales code:
104G8148

Configuration

Motor configuration	**CSCR**
Power supply (nominal)	**208-230 V/60 Hz 1~**
Refrigerant	**R1234yf**
Application	**LBP**
Voltage range	**198-253 V**
Starting torque	**HST**
Approvals	**UL**
Starting device type	**relay**
Run capacitor	**10 µF**
Start capacitor	**80 µF**
LRA (locked rotor amps / 4s/ U(N))	**22 A**
RLA (rated load amps / 1s/ U(N))	**3.9 A**
Cut in current (U(N))	**22 A**

Ambient/ machine room temperatures minimum /maximum
Ambient temperature range: 10 - 43°C / 50 - 109°F
Machine room temp. compressor: 10 - 48°C / 50 - 118°F

System Cooling
fan 3m/s

Electrical Accessories / Wiring Diagram

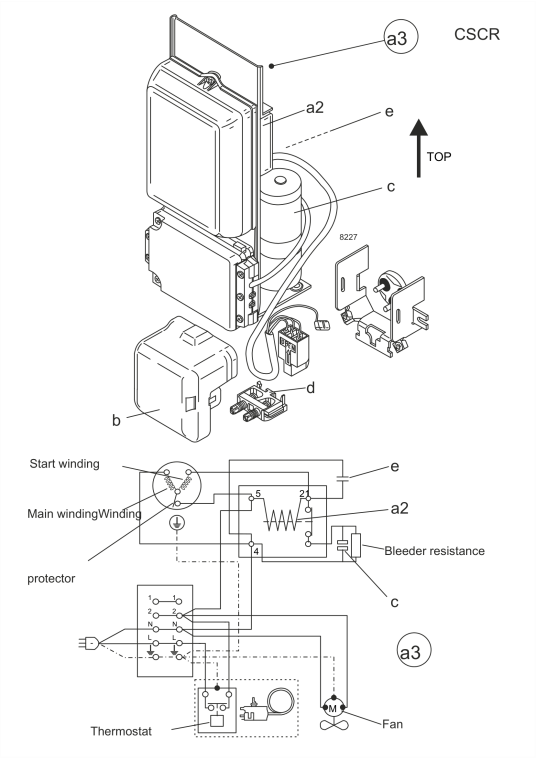

View full size

Components
a3 SC starter kit (550mm) 117-7039
b plastic cover 103N2008
d cord relief 103N1004

Alternative components
a3 SC starter kit (1000mm) 117-7043

Operation Pressure Range

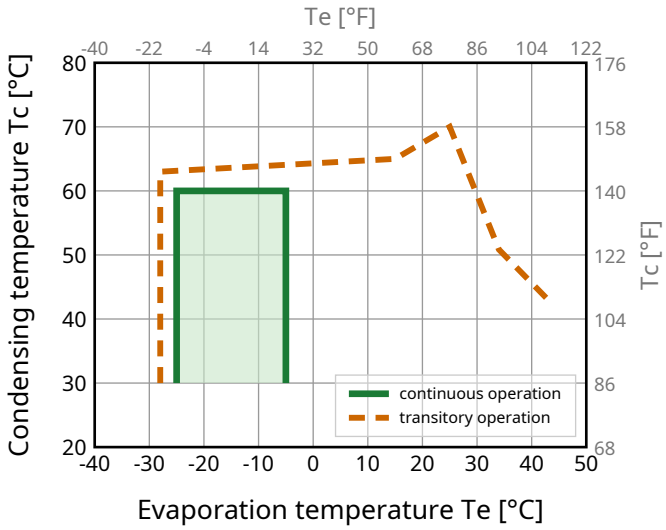

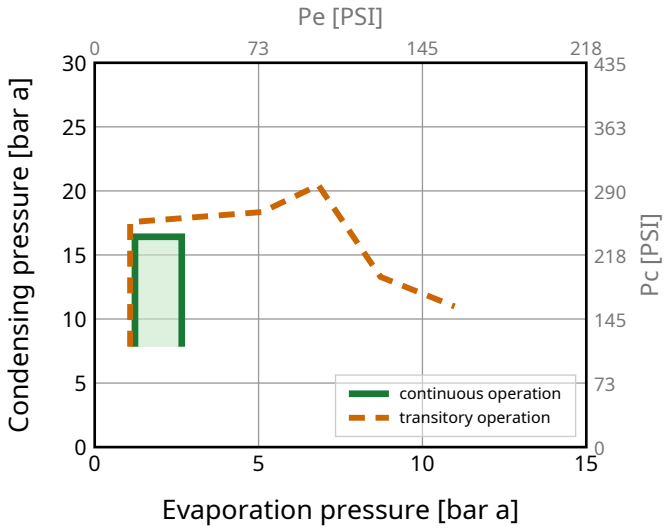

Model
SC21G Configuration 2

Sales code:
104G8148

Standard Conditions

R1234yf, 230 V/60 Hz, CSCR, fan 3m/s

pe	pc	RGT	Tliq	Cooling capacity			COP	EER	P	I	ṁ	
[°C] [°F]	[°C] [°F]	[°C] [°F]	[°C] [°F]	[W]	[Btu/h]	[kcal/h]	[W/W]	[Btu/Wh]	[W]	[A]	[kg/h]	
-23.3 -10	54.4 129.9	32.2 90	32.2 90	**535**	1824	460	**1.11**	3.80	480	2.43	12.59	**ASHRAE LBP**
-6.7 20	54.4 129.9	35 95	46.1 115	**1176**	4011	1011	**1.66**	5.67	708	3.35	31.75	**ASHRAE MBP**
7.2 45	54.4 129.9	35 95	46.1 115	**2136**	7289	1837	**2.34**	7.99	912	4.23	58.82	**ASHRAE HBP**
-35 -31	40 104	20 68	40 104	**265**	903	228	**0.84**	2.85	316	1.86	7.25	**EN12900 LBP**
-10 14	45 113	20 68	45 113	**988**	3369	849	**1.57**	5.36	629	3.02	29.27	**EN12900 MBP**
5 41	50 122	20 68	50 122	**1722**	5876	1481	**1.99**	6.80	864	4.01	55.89	**EN12900 HBP**

Performance Tables

R1234yf, 230 V/60 Hz, CSCR, fan 3m/s

pc= 45/113 | RGT= 32/89.6 | Tliq= 45/113 | °C/°F

pe		Cooling capacity			COP	EER	P	I	ṁ
[°C]	[°F]	[W]	[Btu/h]	[kcal/h]	[W/W]	[Btu/Wh]	[W]	[A]	[kg/h]
-25	-13	**474**	1616	407	**1.08**	3.68	439	2.28	12.70
-20	-4	**633**	2158	544	**1.26**	4.31	501	2.51	17.03
-15	5	**822**	2806	707	**1.46**	4.97	564	2.75	22.22
-10	14	**1046**	3568	899	**1.66**	5.67	629	3.02	28.39
-5	23	**1306**	4455	1123	**1.88**	6.40	696	3.30	35.65

pc= 55/131 | RGT= 32/89.6 | Tliq= 55/131 | °C/°F

-25	-13	**368**	1254	316	**0.81**	2.75	457	2.34	11.13
-20	-4	**507**	1729	436	**0.97**	3.30	525	2.60	15.40
-15	5	**677**	2309	582	**1.14**	3.89	593	2.87	20.66
-10	14	**880**	3003	757	**1.33**	4.53	663	3.15	27.01
-5	23	**1120**	3823	964	**1.53**	5.21	733	3.45	34.60

Model
SC21G Configuration 3

Sales code:
104G8148

Configuration

Motor configuration	**CSCR**
Power supply (nominal)	**220-240 V/50 Hz 1~**
Refrigerant	**R513A**
Application	**LBP+MBP+HBP**
Voltage range	**187-254 V**
Starting torque	**HST**
Approvals	**UL**
Starting device type	**relay**
Run capacitor	**10 µF**
Start capacitor	**80 µF**
LRA (locked rotor amps / 4s/ U(N))	**22 A**
RLA (rated load amps / 1s/ U(N))	**3.9 A**
Cut in current (U(N))	**22 A**

Ambient/ machine room temperatures minimum /maximum
Ambient temperature range: 10 - 43°C / 50 - 109°F
Machine room temp. compressor: 10 - 48°C / 50 - 118°F

System Cooling
fan 3m/s

Electrical Accessories / Wiring Diagram

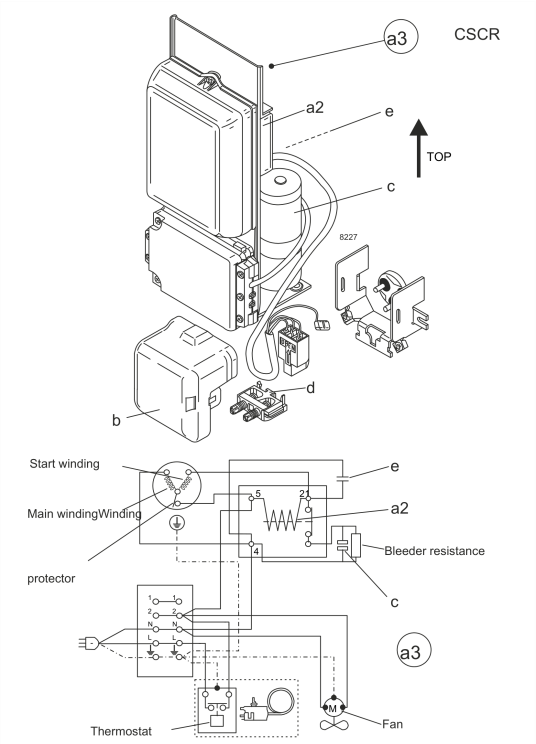

View full size

Components
a3 SC starter kit (550mm) 117-7039
b plastic cover 103N2008
d cord relief 103N1004

Alternative components
a3 SC starter kit (1000mm) 117-7043

Operation Pressure Range

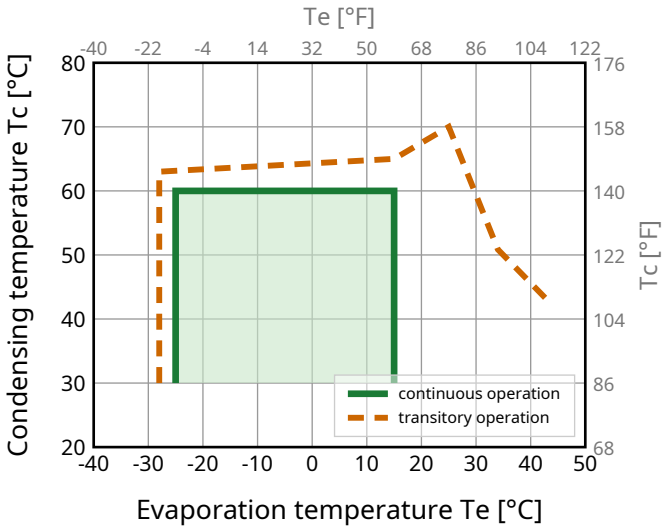

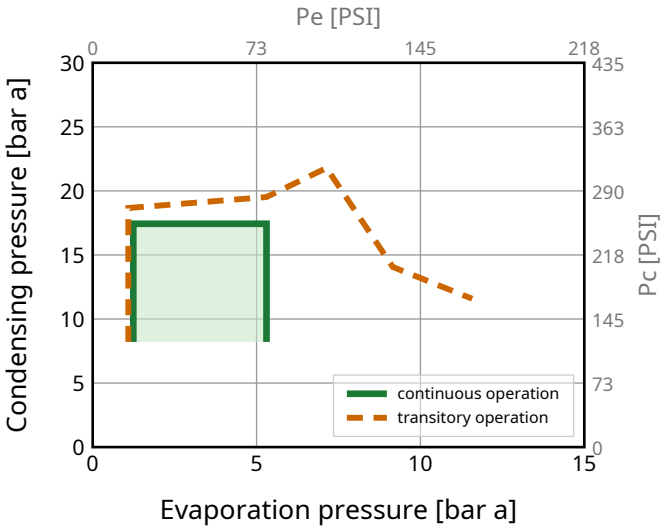

Model Sales code:

SC21G Configuration 3 **104G8148**

Standard Conditions

R513A, 220 V/50 Hz, CSCR, fan 3m/s

pe	pc	RGT	Tliq	Cooling capacity			COP	EER	P	I	ṁ	
[°C] [°F]	[°C] [°F]	[°C] [°F]	[°C] [°F]	[W]	[Btu/h]	[kcal/h]	[W/W]	[Btu/Wh]	[W]	[A]	[kg/h]	
-23.3 -10	54.4 129.9	32.2 90	32.2 90	**532**	1816	458	**1.21**	4.13	440	2.30	11.65	**ASHRAE LBP**
-6.7 20	54.4 129.9	35 95	46.1 115	**1092**	3728	940	**1.68**	5.72	652	3.18	27.24	**ASHRAE MBP**
7.2 45	54.4 129.9	35 95	46.1 115	**1910**	6519	1643	**2.23**	7.61	856	4.12	48.54	**ASHRAE HBP**
-35 -31	40 104	20 68	40 104	**256**	872	220	**0.86**	2.94	297	1.78	6.43	**EN12900 LBP**
-10 14	45 113	20 68	45 113	**943**	3217	811	**1.68**	5.74	560	2.79	25.53	**EN12900 MBP**
5 41	50 122	20 68	50 122	**1593**	5435	1370	**2.03**	6.93	784	3.78	46.97	**EN12900 HBP**

Performance Tables

R513A, 220 V/50 Hz, CSCR, fan 3m/s

pc= 45/113 | RGT= 32/89.6 | Tliq= 45/113 | °C/°F

pe		Cooling capacity			COP	EER	P	I	ṁ
[°C]	[°F]	[W]	[Btu/h]	[kcal/h]	[W/W]	[Btu/Wh]	[W]	[A]	[kg/h]
-25	-13	**468**	1595	402	**1.17**	3.99	400	2.15	11.57
-20	-4	**615**	2099	529	**1.36**	4.65	451	2.35	15.27
-10	14	**989**	3375	851	**1.76**	6.02	560	2.79	24.76
0	32	**1499**	5115	1289	**2.21**	7.55	677	3.29	37.98
10	50	**2183**	7447	1877	**2.72**	9.29	801	3.88	56.22
15	59	**2601**	8875	2237	**3.00**	10.25	866	4.20	67.72

pc= 55/131 | RGT= 32/89.6 | Tliq= 55/131 | °C/°F

-25	-13	**374**	1274	321	**0.89**	3.03	421	2.23	10.34
-20	-4	**508**	1734	437	**1.06**	3.61	481	2.46	14.12
-10	14	**839**	2863	722	**1.38**	4.69	610	2.99	23.54
0	32	**1283**	4379	1104	**1.71**	5.82	752	3.63	36.49
10	50	**1879**	6410	1616	**2.07**	7.08	906	4.37	54.42
15	59	**2245**	7659	1930	**2.27**	7.76	987	4.78	65.81

Model
SC21G Configuration 4

Sales code:
104G8148

Configuration

Motor configuration	**CSCR**
Power supply (nominal)	**220-240 V/60 Hz 1~**
Refrigerant	**R513A**
Application	**LBP**
Voltage range	**198-253 V**
Starting torque	**HST**
Approvals	**UL**
Starting device type	**relay**
Run capacitor	**10 µF**
Start capacitor	**80 µF**
LRA (locked rotor amps / 4s/ U(N))	**22 A**
RLA (rated load amps / 1s/ U(N))	**3.9 A**
Cut in current (U(N))	**22 A**

Ambient/ machine room temperatures minimum /maximum
Ambient temperature range: 10 - 43°C / 50 - 109°F
Machine room temp. compressor: 10 - 48°C / 50 - 118°F

System Cooling
fan 3m/s

Electrical Accessories / Wiring Diagram

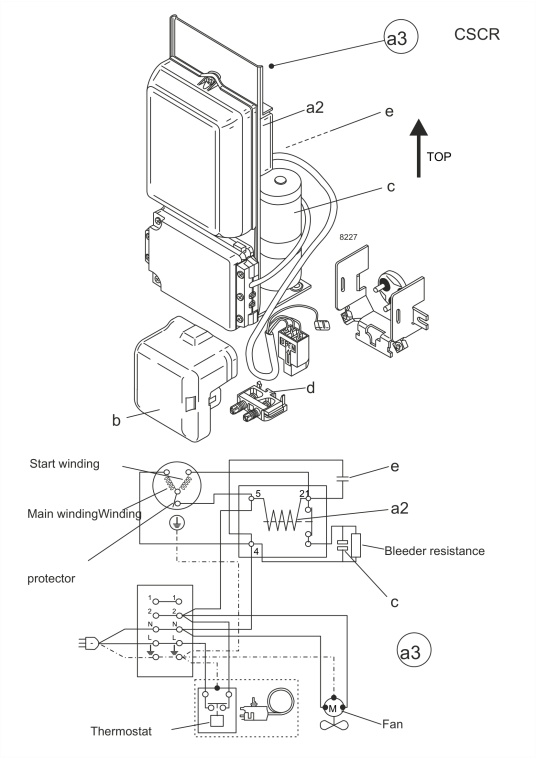

View full size

Components
a3 SC starter kit (550mm) 117-7039
b plastic cover 103N2008
d cord relief 103N1004

Alternative components
a3 SC starter kit (1000mm) 117-7043

Operation Pressure Range

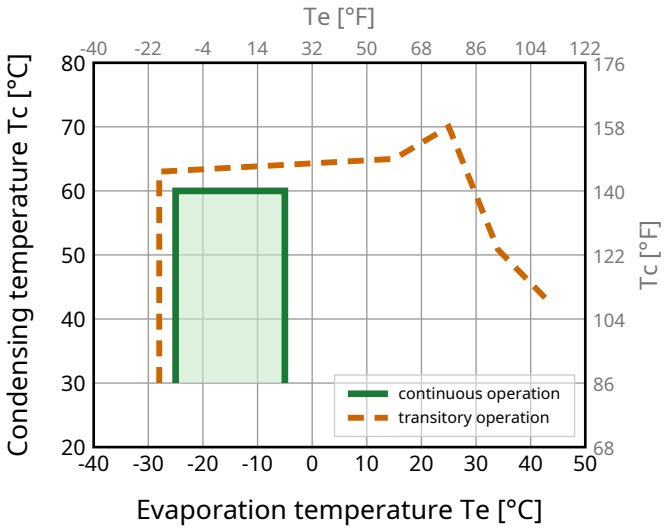

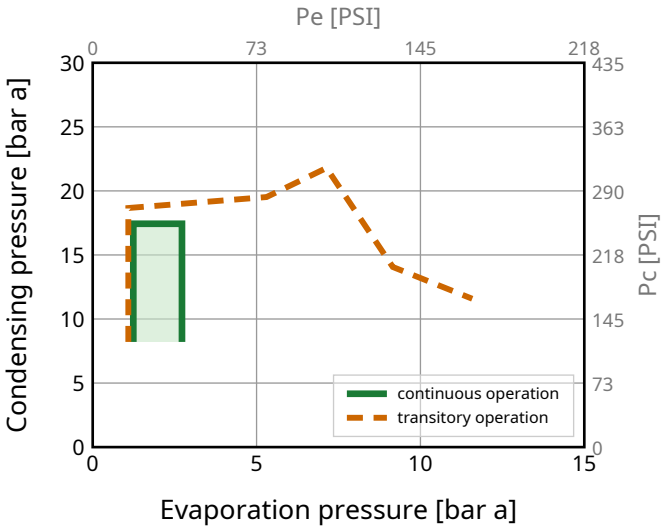

Model Sales code:

SC21G Configuration 4 **104G8148**

Standard Conditions

R513A, 230 V/60 Hz, CSCR, fan 3m/s

pe	pc	RGT	Tliq	Cooling capacity			COP	EER	P	I	ṁ	
[°C] [°F]	[°C] [°F]	[°C] [°F]	[°C] [°F]	[W]	[Btu/h]	[kcal/h]	[W/W]	[Btu/Wh]	[W]	[A]	[kg/h]	
-23.3 -10	54.4 129.9	32.2 90	32.2 90	**598**	2041	514	**1.21**	4.11	496	2.56	13.09	**ASHRAE LBP**
-6.7 20	54.4 129.9	35 95	46.1 115	**1245**	4249	1071	**1.70**	5.79	734	3.48	31.05	**ASHRAE MBP**
7.2 45	54.4 129.9	35 95	46.1 115	**2236**	7630	1923	**2.26**	7.70	991	4.59	56.82	**ASHRAE HBP**
-35 -31	40 104	20 68	40 104	**287**	981	247	**0.87**	2.98	330	1.91	7.23	**EN12900 LBP**
-10 14	45 113	20 68	45 113	**1077**	3673	926	**1.70**	5.79	635	3.08	29.15	**EN12900 MBP**
5 41	50 122	20 68	50 122	**1864**	6360	1603	**2.04**	6.97	912	4.25	54.96	**EN12900 HBP**

Performance Tables

R513A, 230 V/60 Hz, CSCR, fan 3m/s

pc= 45/113 | RGT= 32/89.6 | Tliq= 45/113 | °C/°F

pe		Cooling capacity			COP	EER	P	I	ṁ
[°C]	[°F]	[W]	[Btu/h]	[kcal/h]	[W/W]	[Btu/Wh]	[W]	[A]	[kg/h]
-25	-13	**525**	1791	451	**1.15**	3.92	457	2.41	12.98
-20	-4	**693**	2363	596	**1.35**	4.59	515	2.62	17.19
-15	5	**892**	3044	767	**1.56**	5.31	573	2.84	22.23
-10	14	**1130**	3854	971	**1.78**	6.07	635	3.08	28.27
-5	23	**1412**	4817	1214	**2.00**	6.84	704	3.36	35.53

pc= 55/131 | RGT= 32/89.6 | Tliq= 55/131 | °C/°F

-25	-13	**420**	1434	361	**0.89**	3.04	472	2.46	11.64
-20	-4	**571**	1949	491	**1.05**	3.58	545	2.74	15.88
-15	5	**746**	2545	642	**1.21**	4.14	616	3.01	20.82
-10	14	**951**	3246	818	**1.38**	4.72	688	3.30	26.69
-5	23	**1194**	4073	1027	**1.56**	5.33	765	3.61	33.70