Single
Packs

Single Pack NLE11CNLT 208-230V 60Hz CSIR

Single pack code number: **195B4841**

Position	Title	Code	Amount
1	Compressor NLE11CNLT	105H6109	1
2	Starting relay	117U7005	1
3	Starting capacitor (60µF 220V, 6.3mm)	117U5014	1
4	Cord relief	103N1010	1
5	Cover	103N2011	1
6	Bolt joint for one compressor | M6 | ø16mm	118-1917	1

Secop GmbH • Lise-Meitner-Straße 29 • 24941 Flensburg, Germany • Tel: +49 461 4941 0 • **www.secop.com**

Secop accepts no responsibility for possible errors in catalogs, brochures, and other printed material. Secop reserves the right to alter its products without notice. This also applies to products already on order provided that such alterations can be made without subsequential changes being necessary to specifications already agreed. All trademarks in this material are the property of the respective companies. Secop and the Secop logotype are trademarks of Secop GmbH. All rights reserved.

Model
NLE11CNLT

Sales code:
105H6109

Compressor Data

Refrigerant(s)	**R290**
Refr. charge - tech. limit	**400g / 14.11oz**
Weight	**12.20 kg / 26.90lbs**
Displacement	**11.15 cm3 / 0.68cu.in**
Compressors on pallet	**80**



General – Configurations With NLE11CNLT

–	Conf. 1	Conf. 2	Conf. 3
Motor configuration	CSIR	eRSIR	eRSCR
Power supply (nominal)	208-230 V/60 Hz	208-230 V/60 Hz	208-230 V/60 Hz
Number of phases	1	1	1
Voltage range	187-253 V	187-253 V	187-253 V
Approvals	UL, CB	UL, CB	UL, CB
Starting torque	HST	LST	LST
Refrigerant	R290	R290	R290
Application	LBP	LBP	LBP
Hot gas defrost	OK	OK	OK
Long interval pull down	OK	OK	OK

Application Notes

- Provision for PE Grounding is located at the PE Stamp on the compressor

Model
NLE11CNLT

Sales code:
105H6109

Compressor Design

Oil type	**POE**	Winding resistance main	**5.06 Ohm**
Oil viscosity	**32cSt**	Winding resistance aux	**13.02 Ohm**
Oil quantity	**298 / 10.08fl.oz**	Max. winding temp.	**135 °C**
Free gas volume comp.	**2,360 cm3 / 79.80fl.oz**	Max. discharge temp.	**130°C / 266°F**
Motor protection	**internal**		

Compressor Dimensions

Housing

A Height	**203mm / 7.99in**
B Height	**197mm / 7.76in**
C Length shell	**205mm / 8.07in**
D Length w. cover	**254mm / 10.00in**
E Width	**166mm / 6.54in**

Find 3D Model here

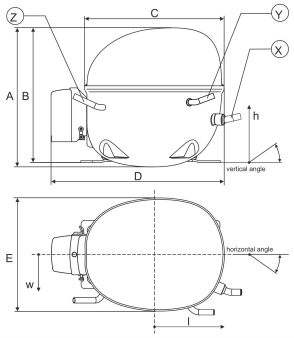

Connectors	Suction X	Discharge Y	Process Z
Diameter [mm]	øi 8.11–8.29 / 0.32–0.33in	øi 6.41–6.59 / 0.25–0.26in	øi 6.41–6.59 / 0.25–0.26in
Material	CU	CU	CU
Horizontal angle ±2°	0°	0°	0°
Vertical angle ±2°	15°	21°	155°
Position l/h/w [mm]	132/68.5/56.7 / 5.20/2.70/2.23in	94/101.7/81 / 3.70/4.00/3.19in	-109.3/94.3/72 / -4.30/3.71/2.83in
Straight tube l. [mm]	12 / 0.47in	12 / 0.47in	12 / 0.47in

Mounting Accessories

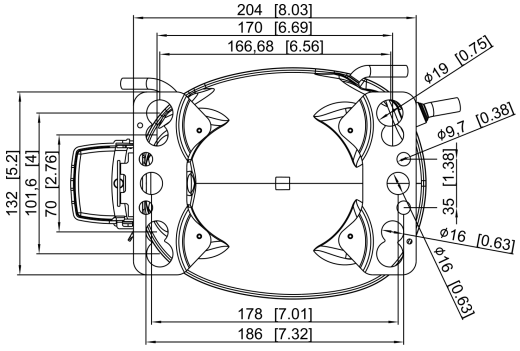

Dimensions in mm [in]

Bolt joint

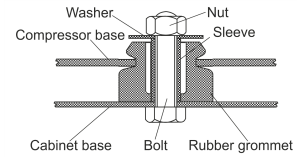

Snap-on

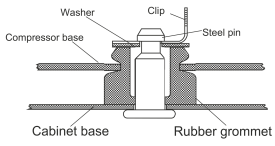

	one comp.	multi pack
Bolt joint | M6 | ø16mm	118-1917	118-1918
Bolt joint | ø1/4" | ø16mm	118-1946	–
Bolt joint | ø1/4" | ø19mm	118-1949	–
Snap-on | ø7,3 | ø16mm	118-1947	118-1919

Model
NLE11CNLT Configuration 1

Sales code:
105H6109

Configuration

Motor configuration	**CSIR**
Power supply (nominal)	**208-230 V/60 Hz 1~**
Refrigerant	**R290**
Application	**LBP**
Voltage range	**187-253 V**
Starting torque	**HST**
Approvals	**UL, CB**
Starting device type	**relay**
Run capacitor	**-/-**
Start capacitor	**60 µF**
LRA (locked rotor amps / 4s/ U(N))	**15.37 A**
RLA (rated load amps / 1s/ U(N))	**2.85 A**
Cut in current (U(N))	**15.37 A**

Ambient/ machine room temperatures minimum /maximum
Ambient temperature range: 10 - 43°C / 50 - 109°F
Machine room temp. compressor: 10 - 48°C / 50 - 118°F

System Cooling
fan 3m/s

Electrical Accessories / Wiring Diagram

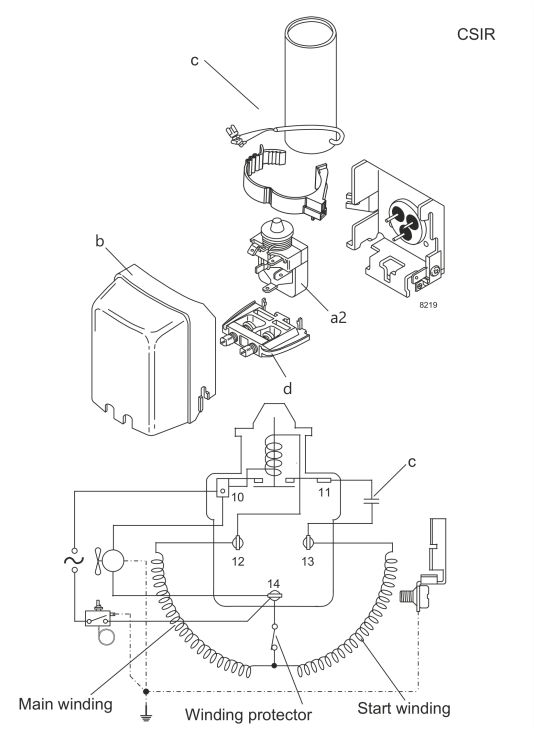

View full size

Components
a2 relay 117U7005
c start capacitor (60µF) 117U5014
b plastic cover 103N2011
d cord relief 103N1010

Operation Pressure Range

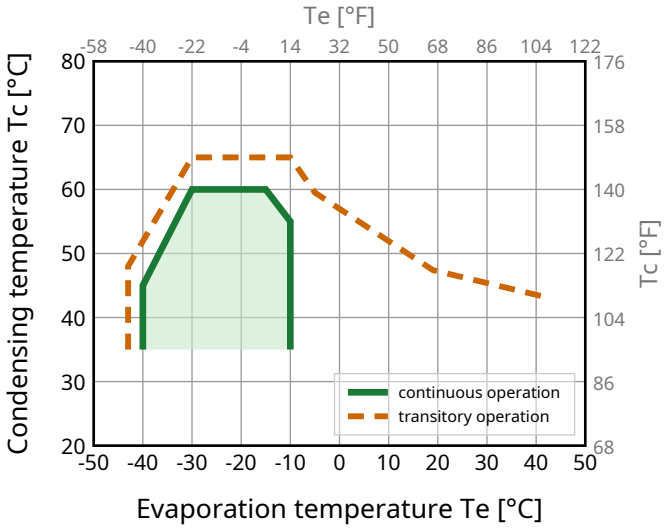

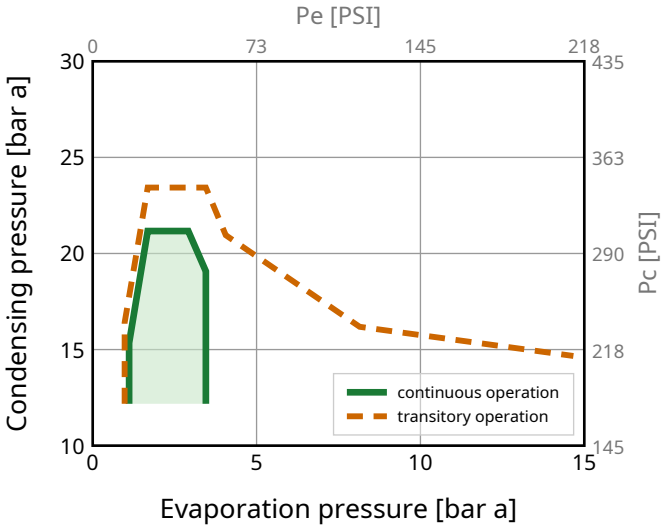

Model
NLE11CNLT Configuration 1

Sales code:
105H6109

Standard Conditions

R290, 220 V/60 Hz, CSIR, fan 3m/s

pe	pc	RGT	Tliq	Cooling capacity			COP	EER	P	I	ṁ	
[°C] [°F]	[°C] [°F]	[°C] [°F]	[°C] [°F]	[W]	[Btu/h]	[kcal/h]	[W/W]	[Btu/Wh]	[W]	[A]	[kg/h]	
-23.3 -10	54.4 129.9	32.2 90	32.2 90	**672**	2292	578	**1.66**	5.66	405	2.32	6.82	**ASHRAE LBP**
-25 -13	55 131	32 89.6	55 131	**499**	1704	429	**1.28**	4.38	389	2.26	6.26	**CECOMAF LBP**
-35 -31	40 104	20 68	40 104	**383**	1306	329	**1.32**	4.49	291	1.93	4.39	**EN12900 LBP**
-23.3 -10	48.8 119.8	4.4 39.9	48.8 119.8	**548**	1869	471	**1.38**	4.71	397	2.29	7.60	**ARI540 LBP**
-23.3 -10	40.6 105.1	32.2 90	32.2 90	**732**	2497	629	**1.92**	6.55	381	2.23	7.43	**AHAM LBP**
-35 -31	45 113	32 89.6	45 113	**369**	1258	317	**1.25**	4.28	294	1.95	4.16	**opt LBP**

Performance Tables

R290, 220 V/60 Hz, CSIR, fan 3m/s

pc= 45/113 | RGT= 32/89.6 | Tliq= 45/113 | °C/°F

pe		Cooling capacity			COP	EER	P	I	ṁ
[°C]	[°F]	[W]	[Btu/h]	[kcal/h]	[W/W]	[Btu/Wh]	[W]	[A]	[kg/h]
-40	-40	**323**	1101	278	**1.27**	4.33	254	1.83	3.63
-35	-31	**369**	1258	317	**1.25**	4.28	294	1.95	4.16
-30	-22	**460**	1570	396	**1.37**	4.69	335	2.08	5.20
-25	-13	**588**	2007	506	**1.56**	5.34	376	2.22	6.67
-20	-4	**744**	2538	640	**1.78**	6.07	418	2.37	8.46
-15	5	**918**	3131	789	**1.99**	6.80	460	2.53	10.48
-10	14	**1101**	3757	947	**2.19**	7.47	503	2.71	12.64

pc= 55/131 | RGT= 32/89.6 | Tliq= 55/131 | °C/°F

-40	-40	**332**	1133	286	**1.33**	4.55	249	1.80	4.13
-35	-31	**340**	1159	292	**1.16**	3.94	294	1.93	4.23
-30	-22	**399**	1360	343	**1.17**	3.99	341	2.08	4.98
-25	-13	**499**	1704	429	**1.28**	4.38	389	2.26	6.26
-20	-4	**633**	2160	545	**1.44**	4.92	439	2.44	7.97
-15	5	**791**	2699	680	**1.61**	5.50	491	2.65	10.01
-10	14	**964**	3289	829	**1.77**	6.04	545	2.87	12.26

Model
NLE11CNLT Configuration 2

Sales code:
105H6109

Configuration

Motor configuration	**eRSIR**
Power supply (nominal)	**208-230 V/60 Hz 1~**
Refrigerant	**R290**
Application	**LBP**
Voltage range	**187-253 V**
Starting torque	**LST**
Approvals	**UL, CB**
Starting device type	**e-PTC**
Run capacitor	**-/-**
Start capacitor	**-/-**
LRA (locked rotor amps / 4s/ U(N))	**15.37 A**
RLA (rated load amps / 1s/ U(N))	**2.85 A**
Cut in current (U(N))	**15.37 A**

Ambient/ machine room temperatures minimum /maximum
Ambient temperature range: 10 - 43°C / 50 - 109°F
Machine room temp. compressor: 10 - 48°C / 50 - 118°F

System Cooling
fan 3m/s

Electrical Accessories / Wiring Diagram

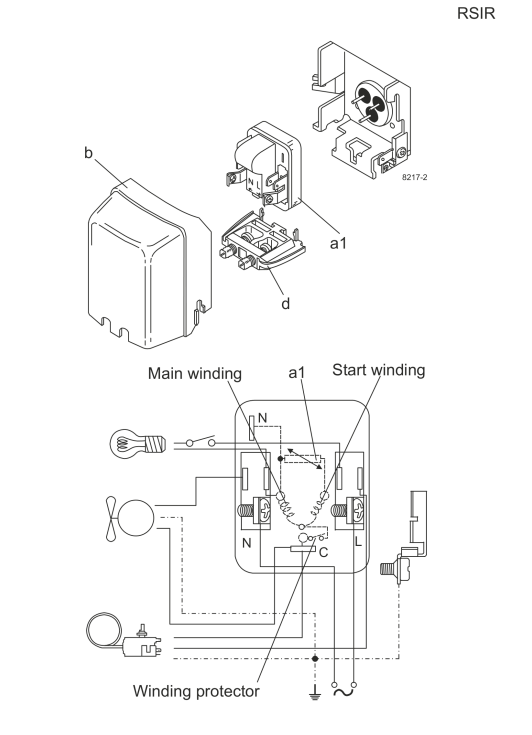

Components
a1 e-PTC starter (220V, 25Ohm, 4.8mm) 103N0050
b plastic cover 103N2011
d cord relief 103N1010

Operation Pressure Range

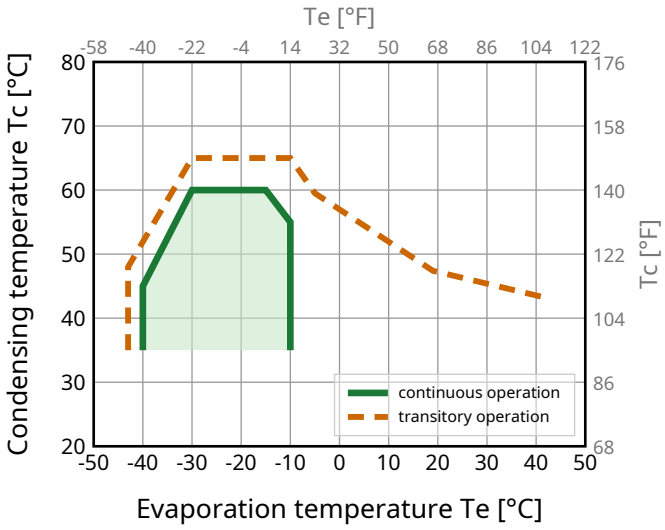

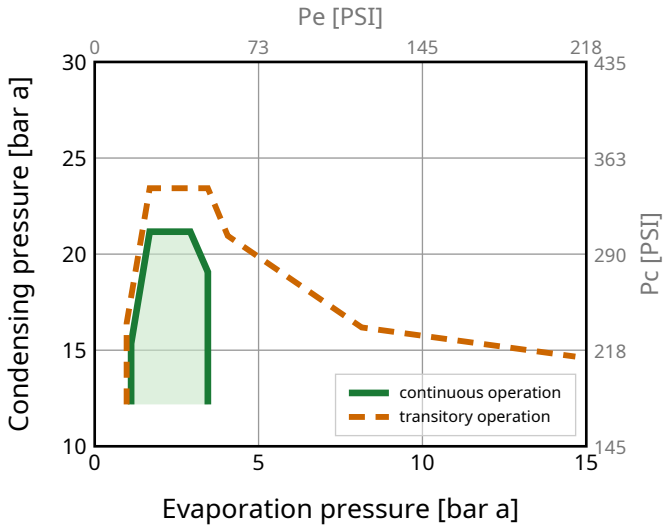

Model

NLE11CNLT Configuration 2

Sales code:

105H6109

Standard Conditions

R290, 220 V/60 Hz, eRSIR, fan 3m/s

pe	pc	RGT	Tliq	Cooling capacity			COP	EER	P	I	ṁ	
[°C] [°F]	[°C] [°F]	[°C] [°F]	[°C] [°F]	[W]	[Btu/h]	[kcal/h]	[W/W]	[Btu/Wh]	[W]	[A]	[kg/h]	
-23.3 -10	54.4 129.9	32.2 90	32.2 90	**672**	2292	578	**1.66**	5.66	405	2.32	6.82	**ASHRAE LBP**
-25 -13	55 131	32 89.6	55 131	**499**	1704	429	**1.28**	4.38	389	2.26	6.26	**CECOMAF LBP**
-35 -31	40 104	20 68	40 104	**383**	1306	329	**1.32**	4.49	291	1.93	4.39	**EN12900 LBP**
-23.3 -10	48.8 119.8	4.4 39.9	48.8 119.8	**548**	1869	471	**1.38**	4.71	397	2.29	7.60	**ARI540 LBP**
-23.3 -10	40.6 105.1	32.2 90	32.2 90	**732**	2497	629	**1.92**	6.55	381	2.23	7.43	**AHAM LBP**
-35 -31	45 113	32 89.6	45 113	**369**	1258	317	**1.25**	4.28	294	1.95	4.16	**opt LBP**

Performance Tables

R290, 220 V/60 Hz, eRSIR, fan 3m/s

pc= 45/113 | RGT= 32/89.6 | Tliq= 45/113 | °C/°F

pe		Cooling capacity			COP	EER	P	I	ṁ
[°C]	[°F]	[W]	[Btu/h]	[kcal/h]	[W/W]	[Btu/Wh]	[W]	[A]	[kg/h]
-40	-40	**323**	1101	278	**1.27**	4.33	254	1.83	3.63
-35	-31	**369**	1258	317	**1.25**	4.28	294	1.95	4.16
-30	-22	**460**	1570	396	**1.37**	4.69	335	2.08	5.20
-25	-13	**588**	2007	506	**1.56**	5.34	376	2.22	6.67
-20	-4	**744**	2538	640	**1.78**	6.07	418	2.37	8.46
-15	5	**918**	3131	789	**1.99**	6.80	460	2.53	10.48
-10	14	**1101**	3757	947	**2.19**	7.47	503	2.71	12.64

pc= 55/131 | RGT= 32/89.6 | Tliq= 55/131 | °C/°F

-40	-40	**332**	1133	286	**1.33**	4.55	249	1.80	4.13
-35	-31	**340**	1159	292	**1.16**	3.94	294	1.93	4.23
-30	-22	**399**	1360	343	**1.17**	3.99	341	2.08	4.98
-25	-13	**499**	1704	429	**1.28**	4.38	389	2.26	6.26
-20	-4	**633**	2160	545	**1.44**	4.92	439	2.44	7.97
-15	5	**791**	2699	680	**1.61**	5.50	491	2.65	10.01
-10	14	**964**	3289	829	**1.77**	6.04	545	2.87	12.26

Model Sales code:

NLE11CNLT Configuration 3 **105H6109**

Configuration

Motor configuration	**eRSCR**
Power supply (nominal)	**208-230 V/60 Hz 1~**
Refrigerant	**R290**
Application	**LBP**
Voltage range	**187-253 V**
Starting torque	**LST**
Approvals	**UL, CB**
Starting device type	**e-PTC**
Run capacitor	**4 µF**
Start capacitor	**-/-**
LRA (locked rotor amps / 4s/ U(N))	**15.37 A**
RLA (rated load amps / 1s/ U(N))	**2.85 A**
Cut in current (U(N))	**15.37 A**

Ambient/ machine room temperatures minimum /maximum
Ambient temperature range: 10 - 43°C / 50 - 109°F
Machine room temp. compressor: 10 - 48°C / 50 - 118°F

System Cooling
fan 3m/s

Electrical Accessories / Wiring Diagram

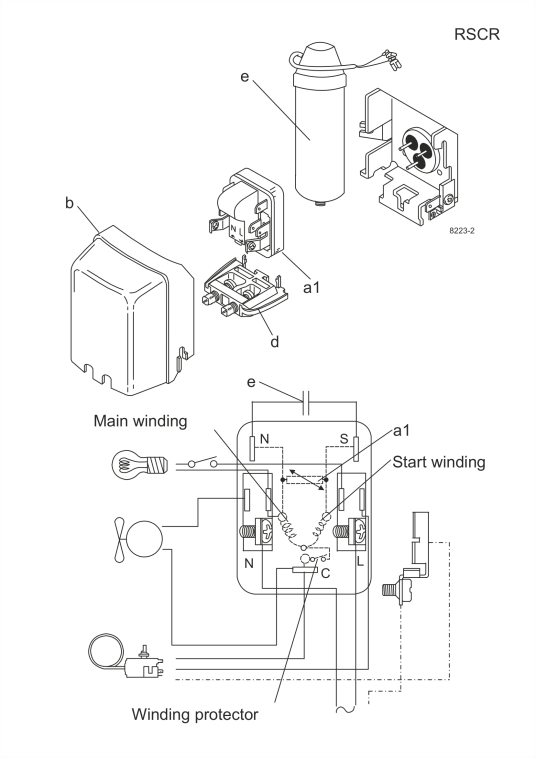

Components
a1 e-PTC starter (220V, 25Ohm, 4.8mm) 103N0050
e run capacitor (4µF, 4.8mm) 117-7165
b plastic cover 103N2011
d cord relief 103N1010
bracket for run capacitor 117-0300
screw M4x8mm 117-0301

Operation Pressure Range

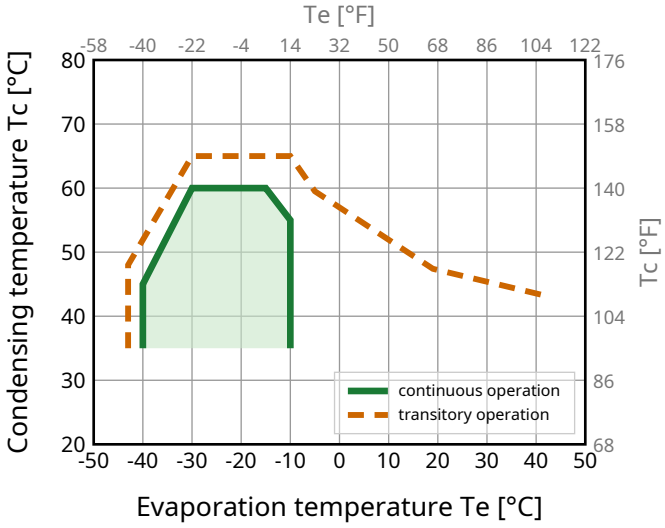

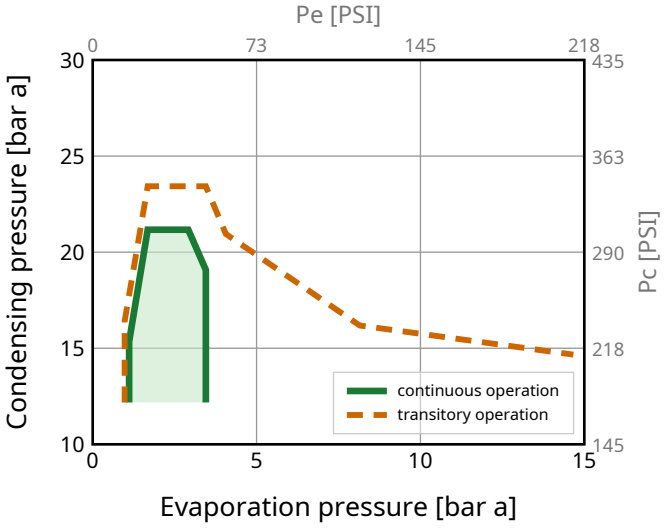

Model Sales code:

NLE11CNLT Configuration 3 **105H6109**

Standard Conditions

R290, 220 V/60 Hz, eRSCR, fan 3m/s

pe	pc	RGT	Tliq	Cooling capacity			COP	EER	P	I	ṁ	
[°C] [°F]	[°C] [°F]	[°C] [°F]	[°C] [°F]	[W]	[Btu/h]	[kcal/h]	[W/W]	[Btu/Wh]	[W]	[A]	[kg/h]	
-23.3 -10	54.4 129.9	32.2 90	32.2 90	**677**	2310	582	**1.77**	6.05	382	1.86	6.88	**ASHRAE LBP**
-25 -13	55 131	32 89.6	55 131	**503**	1717	433	**1.37**	4.67	367	1.80	6.31	**CECOMAF LBP**
-35 -31	40 104	20 68	40 104	**383**	1308	330	**1.40**	4.76	275	1.44	4.40	**EN12900 LBP**
-23.3 -10	48.8 119.8	4.4 39.9	48.8 119.8	**551**	1880	474	**1.47**	5.02	374	1.83	7.65	**ARI540 LBP**
-23.3 -10	40.6 105.1	32.2 90	32.2 90	**732**	2498	630	**2.04**	6.96	359	1.77	7.44	**AHAM LBP**
-35 -31	45 113	32 89.6	45 113	**374**	1276	322	**1.34**	4.57	279	1.46	4.21	**opt LBP**

Performance Tables

R290, 220 V/60 Hz, eRSCR, fan 3m/s

pc= 45/113 | RGT= 32/89.6 | Tliq= 45/113 | °C/°F

pe		Cooling capacity			COP	EER	P	I	ṁ
[°C]	[°F]	[W]	[Btu/h]	[kcal/h]	[W/W]	[Btu/Wh]	[W]	[A]	[kg/h]
-40	-40	**339**	1156	291	**1.39**	4.74	244	1.33	3.81
-35	-31	**374**	1276	322	**1.34**	4.57	279	1.46	4.21
-30	-22	**461**	1574	397	**1.46**	4.98	316	1.60	5.21
-25	-13	**590**	2012	507	**1.66**	5.68	354	1.75	6.68
-20	-4	**748**	2553	643	**1.90**	6.49	394	1.91	8.51
-15	5	**926**	3158	796	**2.13**	7.28	434	2.08	10.57
-10	14	**1111**	3790	955	**2.34**	7.99	474	2.26	12.76

pc= 55/131 | RGT= 32/89.6 | Tliq= 55/131 | °C/°F

-40	-40	**354**	1207	304	**1.46**	4.98	242	1.33	4.39
-35	-31	**349**	1192	300	**1.24**	4.23	282	1.47	4.35
-30	-22	**403**	1374	346	**1.25**	4.25	323	1.63	5.03
-25	-13	**503**	1717	433	**1.37**	4.67	367	1.80	6.31
-20	-4	**639**	2182	550	**1.55**	5.28	413	1.99	8.05
-15	5	**800**	2731	688	**1.74**	5.92	461	2.20	10.12
-10	14	**976**	3328	839	**1.91**	6.51	511	2.42	12.41

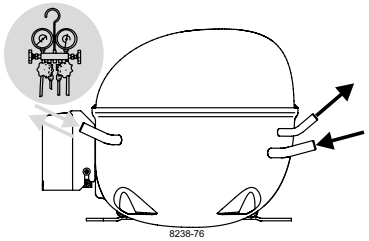

NL Compressors

SECOP

Keep electrical equipment clear from oil, chemicals, and water

When operated with a flammable refrigerant, only spark-proof starting equipment is allowed.

RSIR

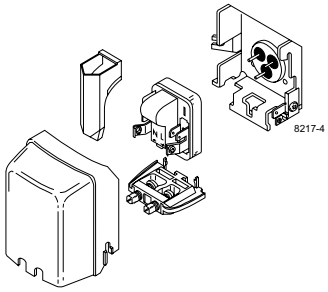

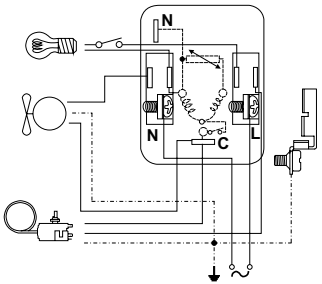

CSIR

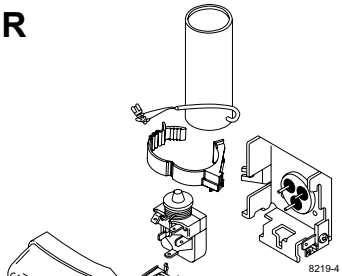

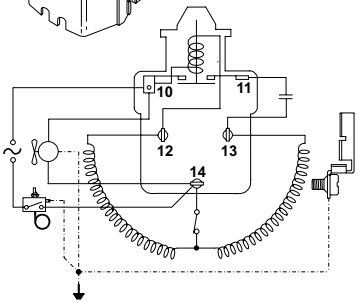

RSCR

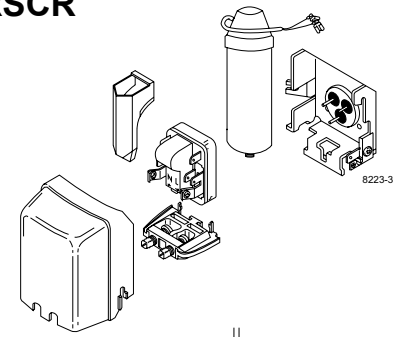

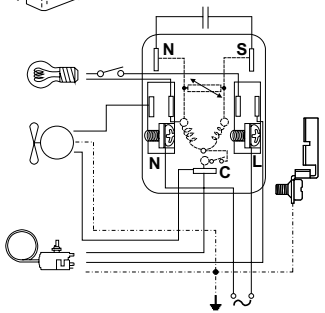

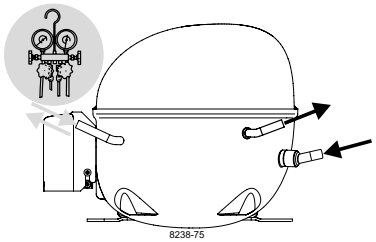

NL Compressors

SECOP

Keep electrical equipment clear from oil, chemicals, and water

When operated with a flammable refrigerant, only spark-proof starting equipment is allowed.

Service/Repair – R290, R600a, R170, R1270, R1234yf

(applies to all flammable refrigerants)



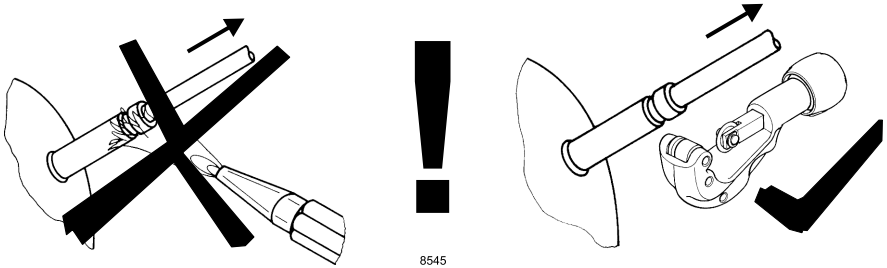

Brazing on Suction Connectors (Direct Intake)

representative image

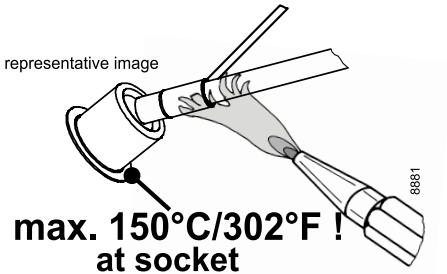

! max. 150°C/302°F ! at socket

brazing solder: phosphor (LP7) or silver

Refer to Product Bulletin:
Brazing on Suction Connectors (Compressors with Direct Suction Intake)

Dismantling, recycling, disposal: At the end of a compressor's lifecycle, proceed by separating and storing components according to their environmental impact. Parts that may cause pollution must be clearly identified and handled separately, ensuring appropriate disposal. Refrigerant gas must not be released into the environment and should be recovered by qualified operators. Compressor oil must also be collected separately. The compressor should be disposed of at specialized disposal centers in accordance with the applicable regulations. **Subject to modifications/alterations. www.secop.com**