Single
Packs

Single Pack SCE23MNDX 220-240V 50Hz CSCR

Single pack code number: **195B4842**

Position	Title	Code	Amount
1	Compressor SCE23MNDX	104H8300	1
2	Starting capacitor (60µF 260V, 6.3mm)	117U5351	1
3	Run Capacitor (10µF 450V, 6.3mm)	117-7166	1
4	Run capacitor bracket	117-0313	1
5	Screw for bracket M4x8mm	117-0301	1
6	Snap-on in quantities | ø7,3 | ø16mm	118-1919	1

Secop GmbH • Lise-Meitner-Straße 29 • 24941 Flensburg, Germany • Tel: +49 461 4941 0 • **www.secop.com**

Secop accepts no responsibility for possible errors in catalogs, brochures, and other printed material. Secop reserves the right to alter its products without notice. This also applies to products already on order provided that such alterations can be made without subsequential changes being necessary to specifications already agreed. All trademarks in this material are the property of the respective companies. Secop and the Secop logotype are trademarks of Secop GmbH. All rights reserved.

Model
SCE23MNDX

Sales code:
104H8300

Compressor Data

Refrigerant(s)	**R290**
Refr. charge - tech. limit	**500g / 17.64oz**
Weight	**14.90 kg / 32.85lbs**
Displacement	**23.00 cm3 / 1.40cu.in**
Compressors on pallet	**48**



General – Configurations With SCE23MNDX

–	**Conf. 1**
Motor configuration	CSCR
Power supply (nominal)	220-240 V/50 Hz
Number of phases	1
Voltage range	198-254 V
Approvals	VDE, CCC, CB
Starting torque	HST
Refrigerant	R290
Application	MBP
Hot gas defrost	OK
Long interval pull down	OK

Application Notes

- Starter kit(relay), cover and cord relief are included and pre-assembled.
- Provision for PE Grounding is located at the PE Stamp on the compressor

Model
SCE23MNDX

Sales code:
104H8300

Compressor Design

Oil type	**POE**	Winding resistance main	**2.8 Ohm**
Oil viscosity	**32cSt**	Winding resistance aux	**10.9 Ohm**
Oil quantity	**500 / 16.91fl.oz**	Max. winding temp.	**125 °C**
Free gas volume comp.	**3,150 cm3 / 106.51fl.oz**	Max. discharge temp.	**140°C / 284°F**
Motor protection	**internal**		

Compressor Dimensions

Housing

A Height	**236.4mm / 9.31in**
B Height	**230.6mm / 9.08in**
C Length shell	**217mm / 8.54in**
D Length w. cover	**263.4mm / 10.37in**
E Width	**161.1mm / 6.34in**

Find 3D Model here

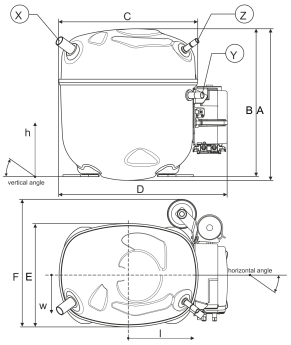

Connectors	Suction X	Discharge Y	Process Z
Diameter [mm]	øi 12.81–12.99 / 0.50–0.51in	øi 8.11–8.29 / 0.32–0.33in	øi 6.11–6.29 / 0.24–0.25in
Material	CU	CU	CU
Horizontal angle ±2°	37°	37°	37°
Vertical angle ±2°	36°	0°	36°
Position l/h/w [mm]	-110.5/211.8/56.7 / -4.35/8.34/2.23in	115.5/127/81 / 4.55/5.00/3.19in	109.5/94.3/72 / 4.31/3.71/2.83in
Straight tube l. [mm]	12 / 0.47in	12 / 0.47in	12 / 0.47in

Mounting Accessories

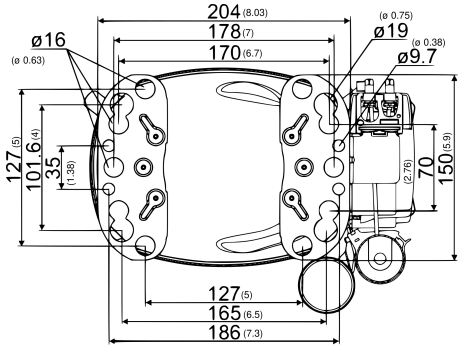

Dimensions in mm [in]

Bolt joint

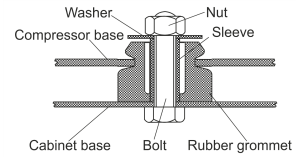

Snap-on

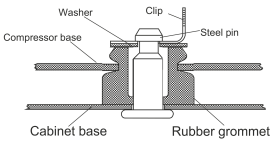

	one comp.	multi pack
Bolt joint | M6 | ø16mm	118-1917	118-1918
Bolt joint | ø1/4" | ø16mm	118-1946	–
Bolt joint | ø1/4" | ø19mm	118-1949	–
Snap-on | ø7,3 | ø16mm	118-1947	118-1919

Model
SCE23MNDX Configuration 1

Sales code:
104H8300

Configuration

Motor configuration	**CSCR**
Power supply (nominal)	**220-240 V/50 Hz 1~**
Refrigerant	**R290**
Application	**MBP**
Voltage range	**198-254 V**
Starting torque	**HST**
Approvals	**VDE, CCC, CB**
Starting device type	**relay**
Run capacitor	**10 µF**
Start capacitor	**60 µF**
LRA (locked rotor amps / 4s/ U(N))	**27.1 A**
RLA (rated load amps / 1s/ U(N))	**4.7 A**
Cut in current (U(N))	**27.1 A**

Ambient/ machine room temperatures minimum /maximum
Ambient temperature range: 10 - 43°C / 50 - 109°F
Machine room temp. compressor: 10 - 48°C / 50 - 118°F

System Cooling
fan 3m/s

Electrical Accessories / Wiring Diagram

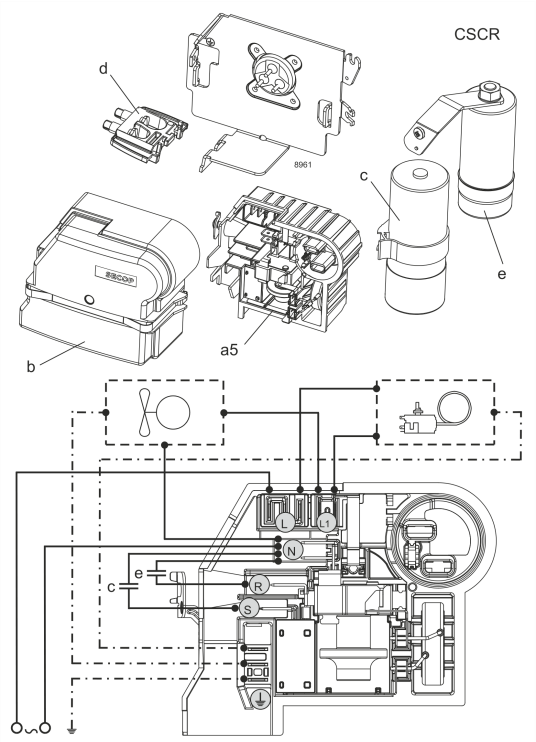

View full size

Components (Starter kit + cover + cord relief: pre-assembled)
a5 SC starter kit 117U8100
c start capacitor (60µF) 117U5351
b cover terminal board + clamp 117U1036
e run cap (10µF, 6.3mm,c.length 280mm) 117-7166
e1 retaining clamp 117-0313
screw M4x8mm 117-0301
d cord relief 103N1007

Operation Pressure Range

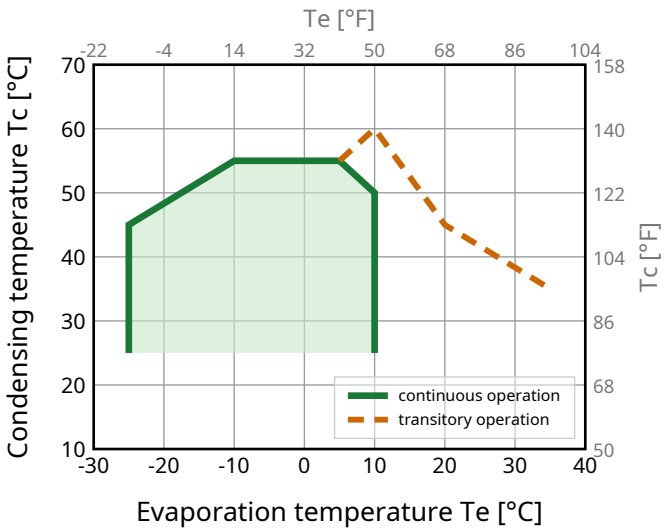

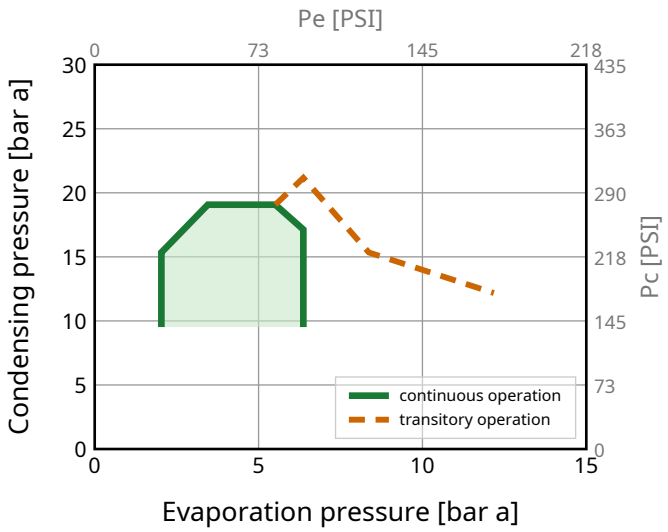

Model Sales code:

SCE23MNDX Configuration 1 **104H8300**

Standard Conditions

R290, 220 V/50 Hz, CSCR, fan 3m/s

pe	pc	RGT	Tliq	Cooling capacity			COP	EER	P	I	ṁ	
[°C] [°F]	[°C] [°F]	[°C] [°F]	[°C] [°F]	[W]	[Btu/h]	[kcal/h]	[W/W]	[Btu/Wh]	[W]	[A]	[kg/h]	
-6.7 20	54.4 129.9	35 95	46.1 115	**1911**	6521	1644	**2.09**	7.13	915	4.34	21.88	**ASHRAE MBP**
-10 14	55 131	32 89.6	55 131	**1523**	5196	1310	**1.74**	5.95	873	4.16	19.37	**CECOMAF MBP**
-10 14	45 113	20 68	45 113	**1703**	5811	1465	**2.14**	7.29	797	3.83	20.96	**EN12900 MBP**
-6.7 20	48.8 119.8	18.3 64.9	48.8 119.8	**1804**	6156	1552	**2.09**	7.13	863	4.12	23.46	**ARI540 MBP**
-10 14	45 113	32 89.6	45 113	**1770**	6041	1523	**2.22**	7.58	797	3.83	20.33	**opt MBP 1**
-25 -13	45 113	32 89.6	45 113	**971**	3314	835	**1.59**	5.44	609	3.04	11.01	**opt MBP 2**

Performance Tables

R290, 220 V/50 Hz, CSCR, fan 3m/s

pc= 45/113 | RGT= 32/89.6 | Tliq= 45/113 | °C/°F

pe		Cooling capacity			COP	EER	P	I	ṁ
[°C]	[°F]	[W]	[Btu/h]	[kcal/h]	[W/W]	[Btu/Wh]	[W]	[A]	[kg/h]
-25	-13	**971**	3314	835	**1.59**	5.44	609	3.04	11.01
-20	-4	**1208**	4120	1039	**1.79**	6.11	674	3.31	13.74
-15	5	**1471**	5019	1265	**2.00**	6.81	738	3.58	16.81
-10	14	**1770**	6041	1523	**2.22**	7.58	797	3.83	20.33
-5	23	**2115**	7216	1819	**2.49**	8.49	850	4.06	24.43
0	32	**2513**	8575	2161	**2.81**	9.58	895	4.26	29.22
5	41	**2974**	10148	2558	**3.20**	10.92	929	4.41	34.86
10	50	**3507**	11967	3016	**3.69**	12.58	951	4.51	41.48

pc= 55/131 | RGT= 32/89.6 | Tliq= 55/131 | °C/°F

-25	-13	**799**	2725	687	**1.25**	4.25	641	3.17	10.01
-20	-4	**1017**	3470	875	**1.41**	4.82	719	3.50	12.80
-15	5	**1255**	4283	1080	**1.57**	5.37	797	3.83	15.88
-10	14	**1523**	5196	1310	**1.74**	5.95	873	4.16	19.37
-5	23	**1828**	6239	1572	**1.94**	6.61	944	4.47	23.40
0	32	**2181**	7442	1876	**2.16**	7.38	1008	4.76	28.13
5	41	**2590**	8836	2227	**2.44**	8.31	1064	5.01	33.69
10	50	**3064**	10453	2635	**2.77**	9.44	1108	5.21	40.26

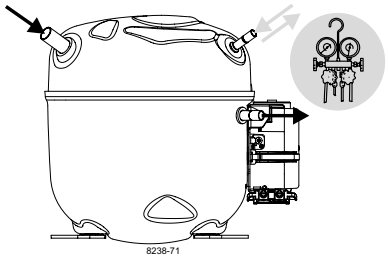

SCE & SCE Plus Compressors

Optimized Electrical CSCR System

SECOP

Keep electrical equipment clear from oil, chemicals, and water

When operated with a flammable refrigerant, only spark-proof starting equipment is allowed.

CSCR

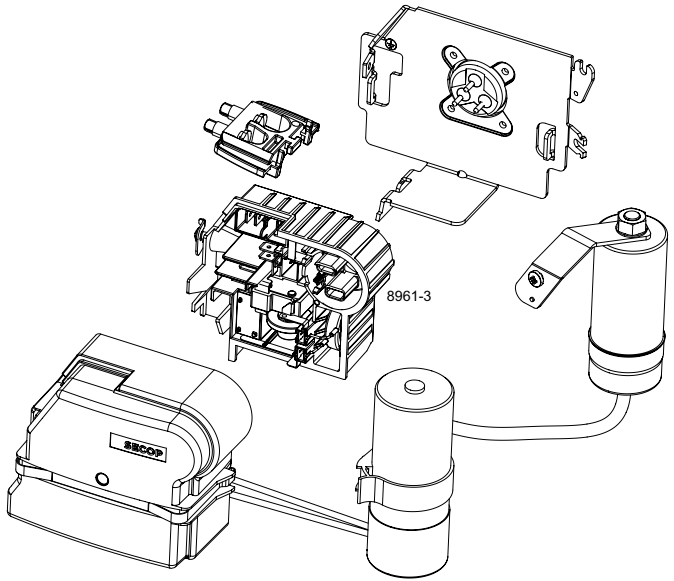

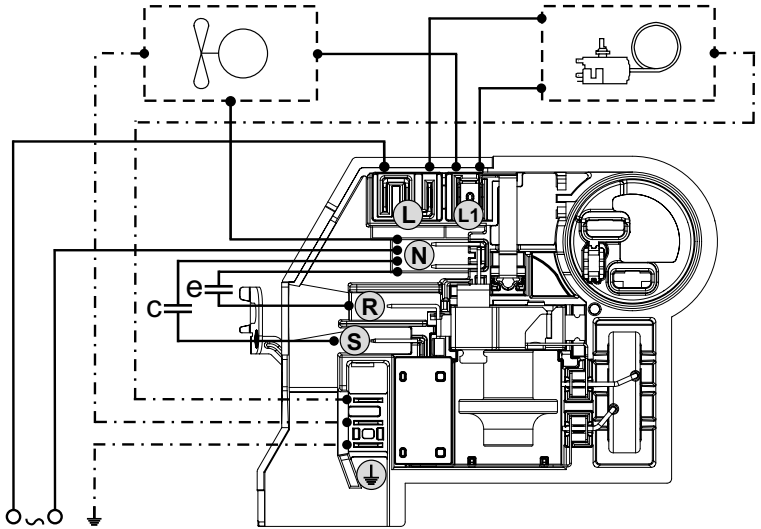

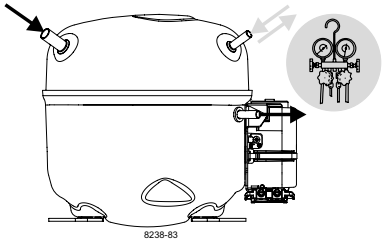

SCE & SCE Plus Compressors

Optimized Electrical CSCR System

SECOP

Keep electrical equipment clear from oil, chemicals, and water

When operated with a flammable refrigerant, only spark-proof starting equipment is allowed.

Service/Repair – R290, R600a, R170, R1270, R1234yf

(applies to all flammable refrigerants)

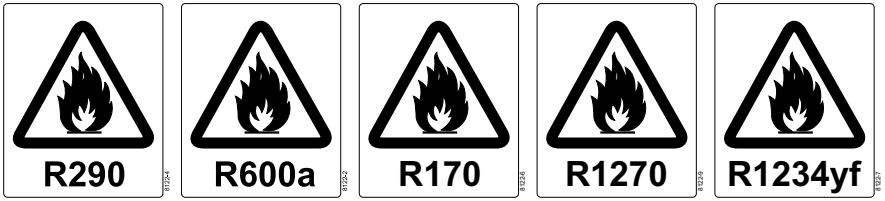

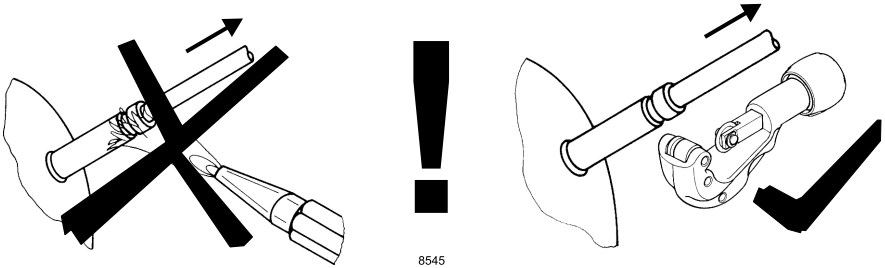

Dismantling, recycling, disposal: At the end of a compressor's lifecycle, proceed by separating and storing components according to their environmental impact. Parts that may cause pollution must be clearly identified and handled separately, ensuring appropriate disposal. Refrigerant gas must not be released into the environment and should be recovered by qualified operators. Compressor oil must also be collected separately. The compressor should be disposed of at specialized disposal centers in accordance with the applicable regulations. **Subject to modifications/alterations. www.secop.com**