Single
Packs

SECOP

Single Pack HXK80AA_F 220-240V 50Hz RSCR

Single pack code number: **195B4843**

Position	Title	Code	Amount
1	Compressor HXK80AA_F	16414500	1
2	Run capacitor (3µF 420V, 4.8mm)	10693200	1
3	e-PTC starting device (240V, overload protector AE24FW6)	15619800	1
4	Cover	10636401	1
5	Cable clamp	16058100	1
6	Screw for cable clamp	10636000	1
7	Screw for cable clamp	10636200	1
8	Earth screw	10641201	1
9	Sleeve	10631600	4
10	Rubber grommet 16mm	11322600	4

Secop GmbH • Lise-Meitner-Straße 29 • 24941 Flensburg, Germany • Tel: +49 461 4941 0 • **www.secop.com**

Secop accepts no responsibility for possible errors in catalogs, brochures, and other printed material. Secop reserves the right to alter its products without notice. This also applies to products already on order provided that such alterations can be made without subsequential changes being necessary to specifications already agreed. All trademarks in this material are the property of the respective companies. Secop and the Secop logotype are trademarks of Secop GmbH. All rights reserved.

Model
HXK80AA

Sales code:
16414500

Compressor Data

Refrigerant(s)	**R600a**
Refr. charge - tech. limit	**150g / 5.29oz**
Weight	**9.00 kg / 19.84lbs**
Displacement	**8.10 cm3 / 0.49cu.in**
Compressors on pallet	**100**



General – Configurations With HXK80AA

–	**Conf. 1**	**Conf. 2**
Motor configuration	eRSCR	RSCR
Power supply (nominal)	220-240 V/50 Hz	220-240 V/50 Hz
Number of phases	1	1
Voltage range	187-264 V	187-264 V
Approvals	VDE	VDE
Starting torque	LST	LST
Refrigerant	R600a	R600a
Application	LBP	LBP

Application Notes

- Various options of connectors are possible - please contact SECOP-Sales.
- Provision for PE Grounding is located at the PE Stamp on the compressor
- Housing with dip-tray fixture (omega bracket).
- Various options of connectors are possible - please contact SECOP-Sales.

Model
HXK80AA

Sales code:
16414500

Compressor Design

Oil type	**Mineral**	Winding resistance main	**27.7 Ohm**
Oil viscosity	**5cSt**	Winding resistance aux	**18.8 Ohm**
Oil quantity	**165 / 5.58fl.oz**	Max. winding temp.	**130 °C**
Free gas volume comp.	**1,620 cm3 / 54.78fl.oz**	Max. discharge temp.	**130°C / 266°F**
Motor protection	**external**		

Compressor Dimensions

Housing

A Height	**174mm / 6.85in**
B Height	**167mm / 6.57in**
C Length shell	**194mm / 7.64in**
D Length w. cover	**238mm / 9.37in**
E Width	**151mm / 5.94in**

Find 3D Model here

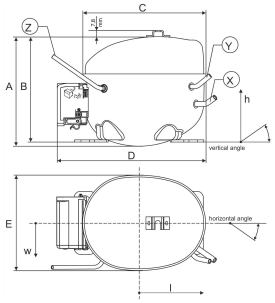

Connectors	Suction X	Discharge Y	Process Z
Diameter [mm]	øi 6.1–6.2 / 0.24–0.24in	øi 5.1–5.2 / 0.20–0.20in	øi 5.92–6.08 / 0.23–0.24in
Material	CU	CU	CU
Horizontal angle ±2°	45°	13°	0°
Vertical angle ±2°	30°	40°	145°
Position l/h/w [mm]	120/71.5/62 / 4.72/2.81/2.44in	112/105.5/62 / 4.41/4.15/2.44in	-140/136/70 / -5.51/5.35/2.76in
Straight tube l. [mm]	13.5 / 0.53in	13.5 / 0.53in	75 / 2.95in

Mounting Accessories

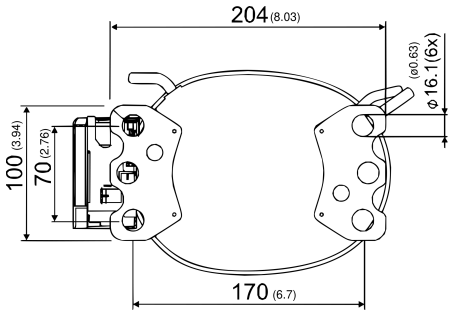

Dimensions in mm [in]

Bolt joint

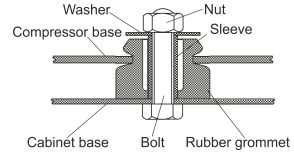

Snap-on

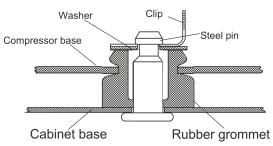

	one comp.	multi pack
'4ZN' with rubber grommet	–	772N
'4ZN' with rubber grommet and sleeve for M6	–	768N
Bolt joint kit	–	4ZN + 118-1917 (18)
'4ZN' with Snap on kit	–	776N

Model
HXK80AA Configuration 1

Sales code:
16414500

Configuration

Motor configuration	**eRSCR**
Power supply (nominal)	**220-240 V/50 Hz 1~**
Refrigerant	**R600a**
Application	**LBP**
Voltage range	**187-264 V**
Starting torque	**LST**
Approvals	**VDE**
Starting device type	**e-PTC**
Run capacitor	**3 µF**
Start capacitor	**-/-**
RLA (rated load amps / 1s/ U(N))	**-/-A**

Ambient/ machine room temperatures minimum /maximum
Ambient temperature range: 10 - 43°C / 50 - 109°F
Machine room temp. compressor: 10 - 48°C / 50 - 118°F

System Cooling
static

Electrical Accessories / Wiring Diagram

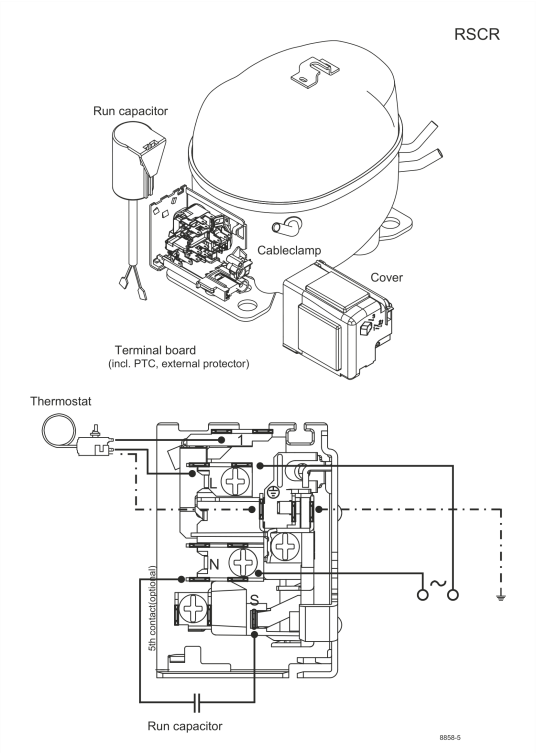

View full size

Components
. terminal board (e-PTC, 4.8mm) 15619800
. run capacitor (3µF, 4.8mm) 10692902
b cover terminal board 10636401
. cable clamp 16058100
. screw - uni6954 10636000
. screw - uni6954 10636200

Alternative components
. run capacitor (3µF, 4.8mm) 10693200
. screw uni en iso 4757 10641201

Operation Pressure Range

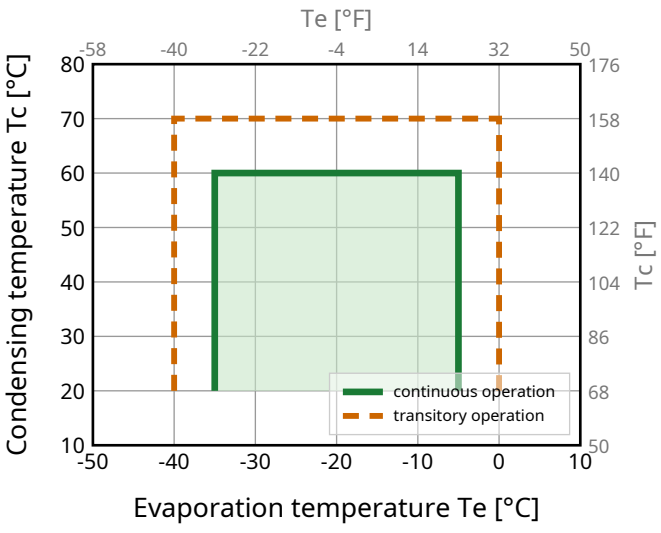

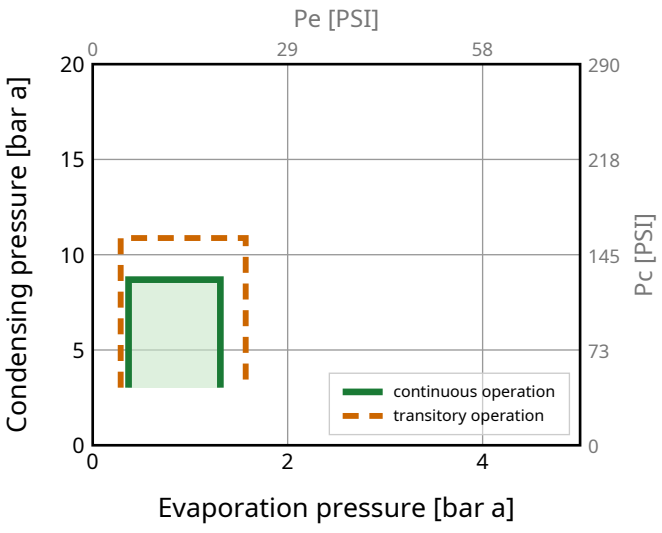

Model
HXK80AA Configuration 1

Sales code:
16414500

Standard Conditions

R600a, 220 V/50 Hz, eRSCR, static

pe	pc	RGT	Tliq	Cooling capacity			COP	EER	P	I	ṁ	
[°C] [°F]	[°C] [°F]	[°C] [°F]	[°C] [°F]	[W]	[Btu/h]	[kcal/h]	[W/W]	[Btu/Wh]	[W]	[A]	[kg/h]	
-23.3 -10	54.4 129.9	32.2 90	32.2 90	**140**	477	120	**1.90**	6.47	74	0.35	1.50	**ASHRAE LBP**
-25 -13	55 131	32 89.6	55 131	**105**	358	90	**1.49**	5.09	70	0.34	1.37	**CECOMAF LBP**
-35 -31	40 104	20 68	40 104	**72**	247	62	**1.42**	4.85	51	0.27	0.88	**EN12900 LBP**
-23.3 -10	48.8 119.8	4.4 39.9	48.8 119.8	**114**	389	98	**1.58**	5.40	72	0.34	1.66	**ARI540 LBP**
-23.3 -10	40.6 105.1	32.2 90	32.2 90	**150**	511	129	**2.15**	7.34	70	0.33	1.61	**AHAM LBP**
-35 -31	45 113	32 89.6	45 113	**69**	235	59	**1.35**	4.60	51	0.28	0.82	**opt LBP**

Performance Tables

R600a, 220 V/50 Hz, eRSCR, static

pc= 45/113 | RGT= 32/89.6 | Tliq= 45/113 | °C/°F

pe		Cooling capacity			COP	EER	P	I	ṁ
[°C]	[°F]	[W]	[Btu/h]	[kcal/h]	[W/W]	[Btu/Wh]	[W]	[A]	[kg/h]
-35	-31	**69**	235	59	**1.35**	4.60	51	0.28	0.82
-30	-22	**93**	316	80	**1.57**	5.36	59	0.30	1.10
-25	-13	**121**	414	104	**1.79**	6.12	68	0.33	1.45
-20	-4	**155**	530	133	**2.01**	6.87	77	0.36	1.85
-15	5	**194**	662	167	**2.23**	7.62	87	0.39	2.32
-10	14	**238**	811	205	**2.46**	8.38	97	0.43	2.85
-5	23	**287**	978	246	**2.69**	9.17	107	0.48	3.44

pc= 55/131 | RGT= 32/89.6 | Tliq= 55/131 | °C/°F

-35	-31	**58**	197	50	**1.12**	3.83	52	0.28	0.75
-30	-22	**79**	269	68	**1.31**	4.46	60	0.31	1.03
-25	-13	**105**	358	90	**1.49**	5.09	70	0.34	1.37
-20	-4	**136**	464	117	**1.68**	5.72	81	0.38	1.78
-15	5	**172**	588	148	**1.86**	6.34	93	0.41	2.25
-10	14	**213**	728	183	**2.04**	6.96	105	0.46	2.80
-5	23	**259**	885	223	**2.23**	7.59	117	0.52	3.41

Model
HXK80AA Configuration 2

Sales code:
16414500

Configuration

Motor configuration	**RSCR**
Power supply (nominal)	**220-240 V/50 Hz 1~**
Refrigerant	**R600a**
Application	**LBP**
Voltage range	**187-264 V**
Starting torque	**LST**
Approvals	**VDE**
Starting device type	**PTC**
Run capacitor	**3 µF**
Start capacitor	**-/-**
RLA (rated load amps / 1s/ U(N))	**-/-A**

Ambient/ machine room temperatures minimum /maximum
Ambient temperature range: 10 - 43°C / 50 - 109°F
Machine room temp. compressor: 10 - 48°C / 50 - 118°F

System Cooling
static

Electrical Accessories / Wiring Diagram

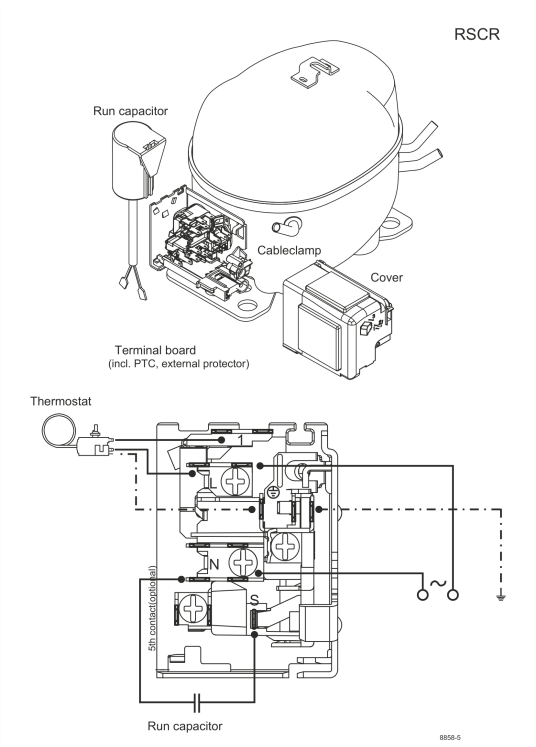

View full size

Components
. terminal board (PTC, 4.8mm) 15661200
. run capacitor (3µF, 4.8mm) 10692902
b cover terminal board 10636401
. cable clamp 16058100
. screw - uni6954 10636000
. screw - uni6954 10636200

Alternative components
. run capacitor (3µF, 4.8mm) 10693200
. screw uni en iso 4757 10641201

Operation Pressure Range

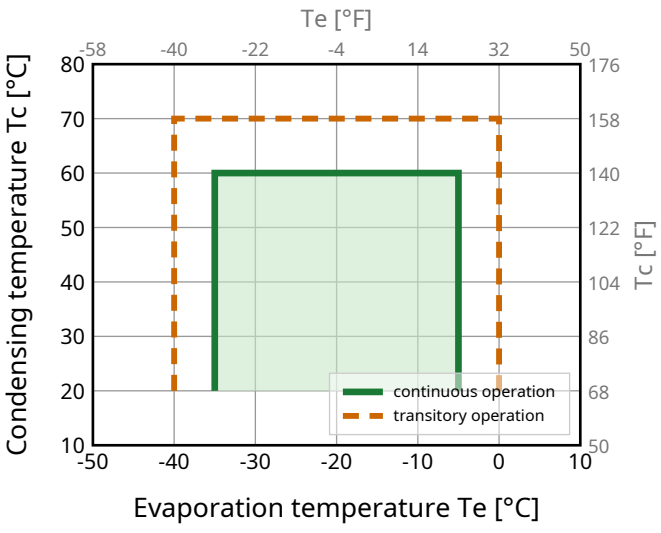

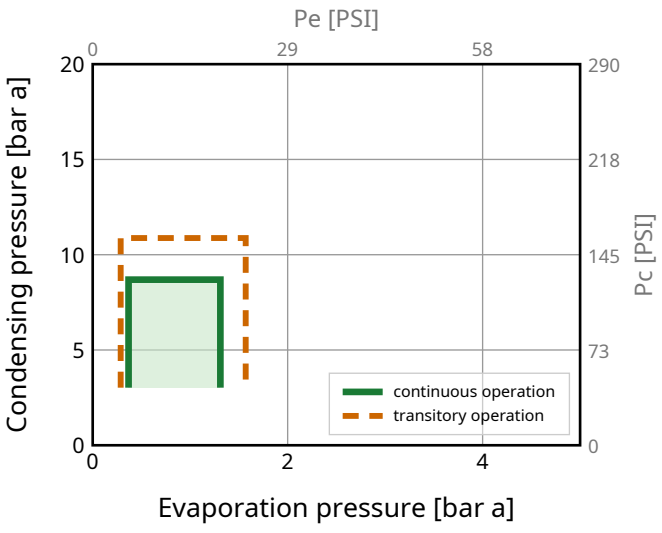

Model
HXK80AA Configuration 2

Sales code:
16414500

Standard Conditions

R600a, 220 V/50 Hz, RSCR, static

pe	pc	RGT	Tliq	Cooling capacity			COP	EER	P	I	ṁ	
[°C] [°F]	[°C] [°F]	[°C] [°F]	[°C] [°F]	[W]	[Btu/h]	[kcal/h]	[W/W]	[Btu/Wh]	[W]	[A]	[kg/h]	
-23.3 -10	54.4 129.9	32.2 90	32.2 90	**140**	477	120	**1.90**	6.47	74	0.35	1.50	**ASHRAE LBP**
-25 -13	55 131	32 89.6	55 131	**105**	358	90	**1.49**	5.09	70	0.34	1.37	**CECOMAF LBP**
-35 -31	40 104	20 68	40 104	**72**	247	62	**1.42**	4.85	51	0.27	0.88	**EN12900 LBP**
-23.3 -10	48.8 119.8	4.4 39.9	48.8 119.8	**114**	389	98	**1.58**	5.40	72	0.34	1.66	**ARI540 LBP**
-23.3 -10	40.6 105.1	32.2 90	32.2 90	**150**	511	129	**2.15**	7.34	70	0.33	1.61	**AHAM LBP**
-35 -31	45 113	32 89.6	45 113	**69**	235	59	**1.35**	4.60	51	0.28	0.82	**opt LBP**

Performance Tables

R600a, 220 V/50 Hz, RSCR, static

pc= 45/113 | RGT= 32/89.6 | Tliq= 45/113 | °C/°F

pe		Cooling capacity			COP	EER	P	I	ṁ
[°C]	[°F]	[W]	[Btu/h]	[kcal/h]	[W/W]	[Btu/Wh]	[W]	[A]	[kg/h]
-35	-31	**69**	235	59	**1.35**	4.60	51	0.28	0.82
-30	-22	**93**	316	80	**1.57**	5.36	59	0.30	1.10
-25	-13	**121**	414	104	**1.79**	6.12	68	0.33	1.45
-20	-4	**155**	530	133	**2.01**	6.87	77	0.36	1.85
-15	5	**194**	662	167	**2.23**	7.62	87	0.39	2.32
-10	14	**238**	811	205	**2.46**	8.38	97	0.43	2.85
-5	23	**287**	978	246	**2.69**	9.17	107	0.48	3.44

pc= 55/131 | RGT= 32/89.6 | Tliq= 55/131 | °C/°F

-35	-31	**58**	197	50	**1.12**	3.83	52	0.28	0.75
-30	-22	**79**	269	68	**1.31**	4.46	60	0.31	1.03
-25	-13	**105**	358	90	**1.49**	5.09	70	0.34	1.37
-20	-4	**136**	464	117	**1.68**	5.72	81	0.38	1.78
-15	5	**172**	588	148	**1.86**	6.34	93	0.41	2.25
-10	14	**213**	728	183	**2.04**	6.96	105	0.46	2.80
-5	23	**259**	885	223	**2.23**	7.59	117	0.52	3.41

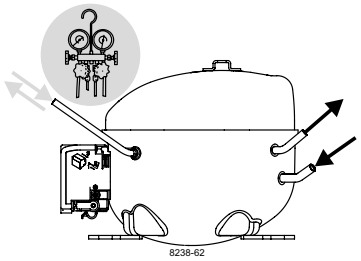

K-Series Compressors
GTK, HKK, HMK, HTK, HXK, HZK

SECOP

Keep electrical equipment clear from oil, chemicals, and water

When operated with a flammable refrigerant, only spark-proof starting equipment is allowed.

RSCR

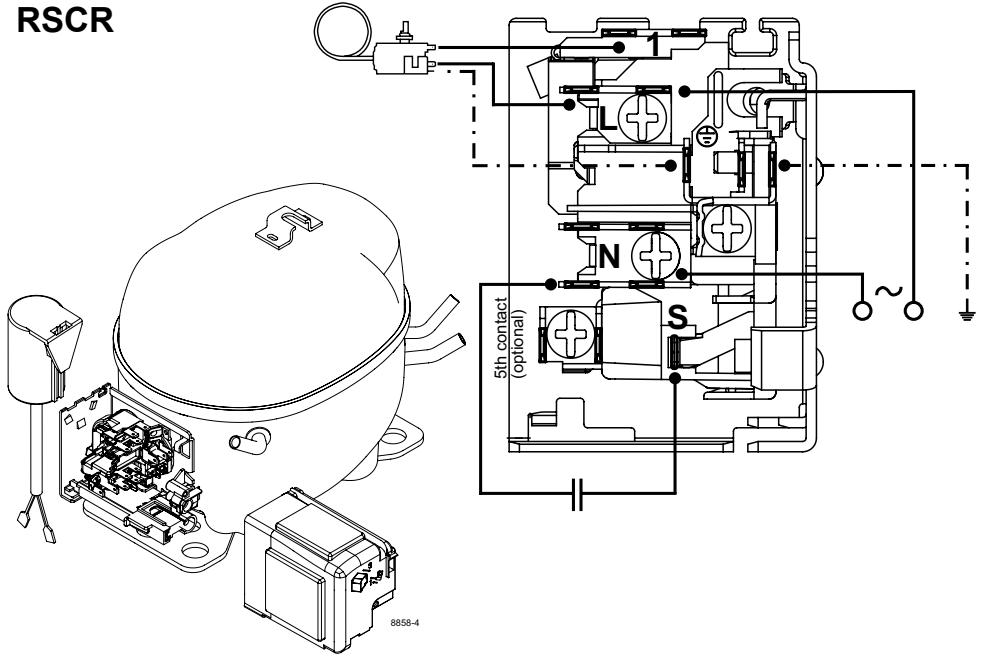

Service/Repair – R600a, R1234yf
(applies to all flammable refrigerants)

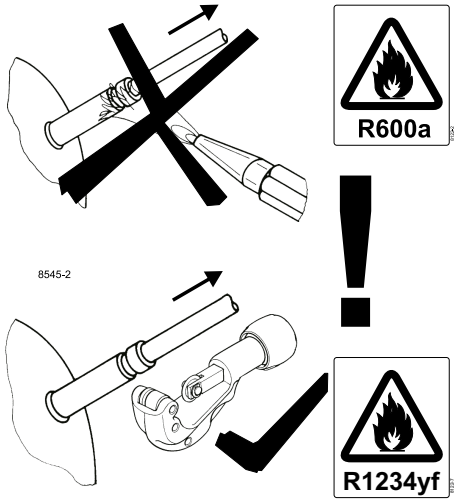

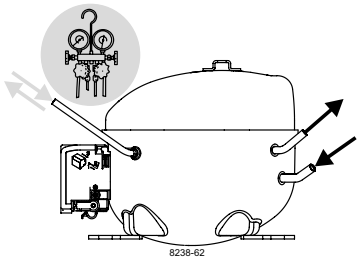

K-Series Compressors
GTK, HKK, HMK, HTK, HXK, HZK

SECOP

Keep electrical equipment clear from oil, chemicals, and water

When operated with a flammable refrigerant, only spark-proof starting equipment is allowed.

RSIR

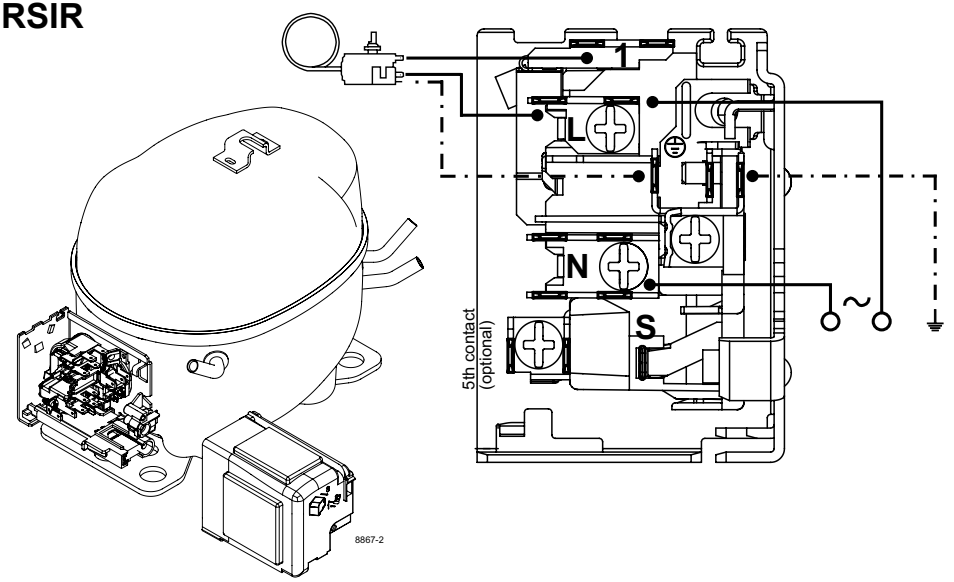

Service/Repair – R600a, R1234yf
(applies to all flammable refrigerants)

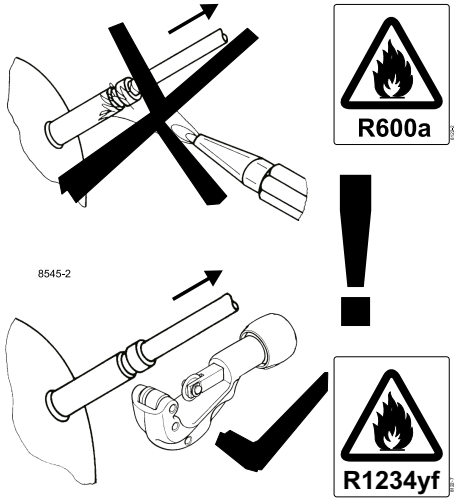

Dismantling, recycling, disposal: At the end of a compressor's lifecycle, proceed by separating and storing components according to their environmental impact. Parts that may cause pollution must be clearly identified and handled separately, ensuring appropriate disposal. Refrigerant gas must not be released into the environment and should be recovered by qualified operators. Compressor oil must also be collected separately. The compressor should be disposed of at specialized disposal centers in accordance with the applicable regulations. **Subject to modifications/alterations. www.secop.com**