Single
Packs

Single Pack KLF7.7CNDS 220-240V 50Hz CSIR

Single pack code number: **195B4844**

Position	Title	Code	Amount
1	Compressor KLF7.7CNDS	106H2803	1
2	Starting capacitor (80µF 220V, 6.3mm)	117U5001	1
3	Starting relay (QLZ-5.5A, overload protector T0377/L6)	117U7071	1
4	KL accessories	103N1060	1
5	Bolt joint for one compressor | M6 | ø16mm	118-1917	1

Secop GmbH • Lise-Meitner-Straße 29 • 24941 Flensburg, Germany • Tel: +49 461 4941 0 • **www.secop.com**

Secop accepts no responsibility for possible errors in catalogs, brochures, and other printed material. Secop reserves the right to alter its products without notice. This also applies to products already on order provided that such alterations can be made without subsequential changes being necessary to specifications already agreed. All trademarks in this material are the property of the respective companies. Secop and the Secop logotype are trademarks of Secop GmbH. All rights reserved.

Model
KLF7.7CNDS

Sales code:
106h2803

Compressor Data

Refrigerant(s)	**R290**
Refr. charge - tech. limit	**200g / 7.05oz**
Weight	**9.60 kg / 21.16lbs**
Displacement	**7.70 cm3 / 0.47cu.in**
Compressors on pallet	**100**



General – Configurations With KLF7.7CNDS

–	**Conf. 1**
Motor configuration	CSIR
Power supply (nominal)	220-240 V/50 Hz
Number of phases	1
Voltage range	198-254 V
Approvals	VDE, CCC
Starting torque	HST
Refrigerant	R290
Application	LBP+MBP
Hot gas defrost	OK
Long interval pull down	OK

Application Notes

- Provision for PE Grounding is located at the PE Stamp on the compressor
- Very good robustness against liquid intake.
- Ice-cube maker optimization - indirect suction intake.

Model
KLF7.7CNDS

Sales code:
106h2803

Compressor Design

Oil type	**POE**	Winding resistance main	**8.4 Ohm**
Oil viscosity	**9,7cSt**	Winding resistance aux	**11.9 Ohm**
Oil quantity	**165 / 5.58fl.oz**	Max. winding temp.	**125 °C**
Free gas volume comp.	**1,575 cm3 / 53.26fl.oz**	Max. discharge temp.	**130°C / 266°F**
Motor protection	**external**		

Compressor Dimensions

Housing

A Height	**182mm / 7.17in**
B Height	**175mm / 6.89in**
C Length shell	**198mm / 7.80in**
D Length w. cover	**238mm / 9.37in**
E Width	**160mm / 6.30in**

Find 3D Model here

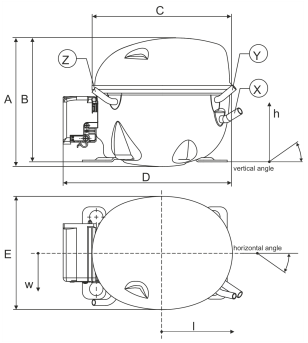

Connectors	Suction X	Discharge Y	Process Z
Diameter [mm]	øi 8.11–8.29 / 0.32–0.33in	øi 6.11–6.29 / 0.24–0.25in	øi 6.11–6.29 / 0.24–0.25in
Material	CU	CU	CU
Horizontal angle ±2°	35°	13°	0°
Vertical angle ±2°	30°	40°	145°
Position l/h/w [mm]	119/73/59 / 4.69/2.87/2.32in	117/107/66 / 4.61/4.21/2.60in	-88/101/71 / -3.46/3.98/2.80in
Straight tube l. [mm]	13.5 / 0.53in	13.5 / 0.53in	13.5 / 0.53in

Mounting Accessories

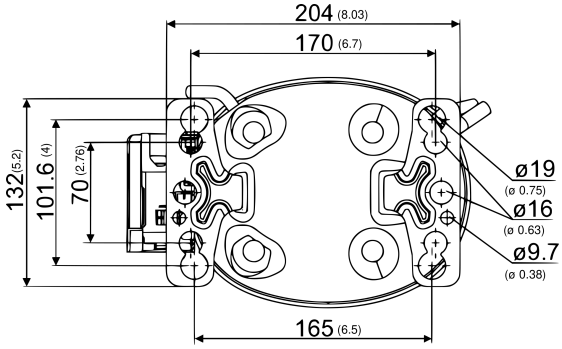

Dimensions in mm [in]

Bolt joint

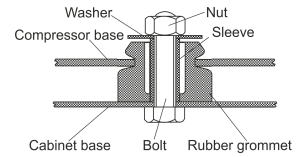

Snap-on

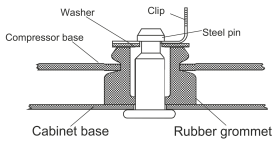

	one comp.	multi pack
Bolt joint | M6 | ø16mm	118-1917	118-1918
Bolt joint | ø1/4" | ø16mm	118-1946	–
Bolt joint | ø1/4" | ø19mm	118-1949	–
Snap-on | ø7,3 | ø16mm	118-1947	118-1919

Model
KLF7.7CNDS Configuration 1

Sales code:
106h2803

Configuration

Motor configuration	**CSIR**
Power supply (nominal)	**220-240 V/50 Hz 1~**
Refrigerant	**R290**
Application	**LBP+MBP**
Voltage range	**198-254 V**
Starting torque	**HST**
Approvals	**VDE, CCC**
Starting device type	**relay**
Run capacitor	**-/-**
Start capacitor	**80 µF**
LRA (locked rotor amps / 4s/ U(N))	**13.2 A**
RLA (rated load amps / 1s/ U(N))	**2.1 A**
Cut in current (U(N))	**12.3 A**

Ambient/ machine room temperatures minimum /maximum
Ambient temperature range: 10 - 43°C / 50 - 109°F
Machine room temp. compressor: 10 - 48°C / 50 - 118°F

System Cooling
fan 3m/s

Electrical Accessories / Wiring Diagram

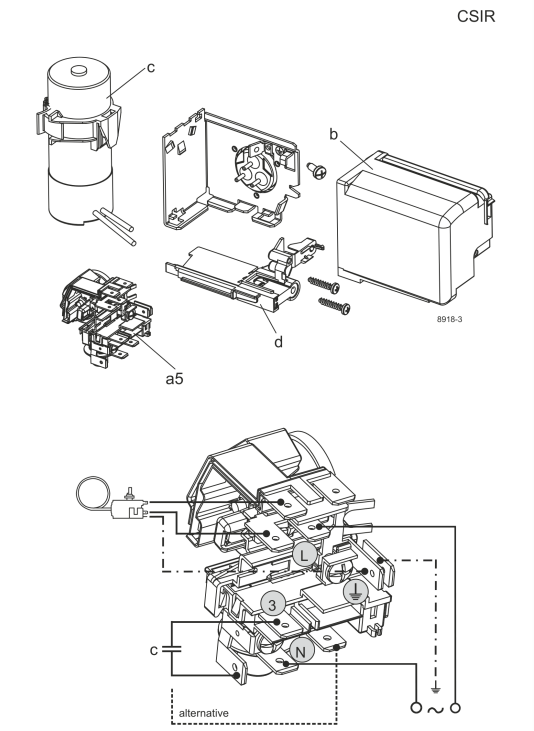

View full size

Components
a5 current relay (T0377/L6-S1) 117U7071
c start capacitor (80µF, 6.3mm) 117U5001
b, d cover + clamp + screws (5VA-compl.) 103N0600

Alternative components
b, d 100x cover + clamp + screws (5VA) 103N2060
b, d cover + clamp + screws (5VA) in bag 103N1060

Operation Pressure Range

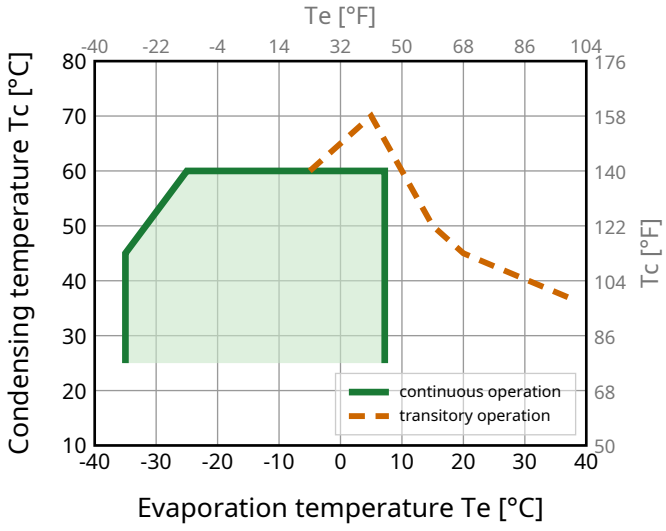

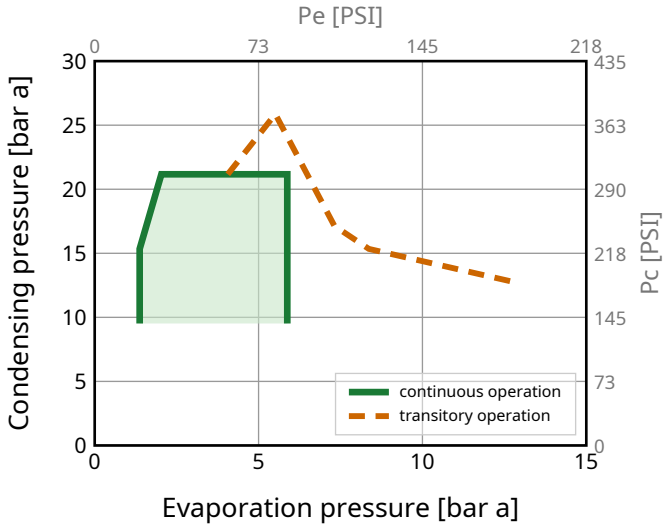

Model
KLF7.7CNDS Configuration 1

Sales code:
106h2803

Standard Conditions

R290, 220 V/50 Hz, CSIR, fan 3m/s

pe	pc	RGT	Tliq	Cooling capacity			COP	EER	P	I	ṁ	
[°C] [°F]	[°C] [°F]	[°C] [°F]	[°C] [°F]	[W]	[Btu/h]	[kcal/h]	[W/W]	[Btu/Wh]	[W]	[A]	[kg/h]	
-23.3 -10	54.4 129.9	32.2 90	32.2 90	**373**	1273	321	**1.49**	5.07	251	1.66	3.79	**ASHRAE LBP**
-25 -13	55 131	32 89.6	55 131	**278**	947	239	**1.15**	3.91	242	1.64	3.48	**CECOMAF LBP**
-35 -31	40 104	20 68	40 104	**215**	733	185	**1.18**	4.01	183	1.47	2.47	**EN12900 LBP**
-6.7 20	54.4 129.9	35 95	46.1 115	**663**	2264	571	**1.96**	6.67	339	1.97	7.59	**ASHRAE MBP**
-10 14	55 131	32 89.6	55 131	**528**	1802	454	**1.63**	5.56	324	1.91	6.71	**CECOMAF MBP**
-10 14	45 113	20 68	45 113	**588**	2006	506	**1.98**	6.76	297	1.81	7.24	**EN12900 MBP**

Performance Tables

R290, 220 V/50 Hz, CSIR, fan 3m/s

pc= 45/113 | RGT= 32/89.6 | Tliq= 45/113 | °C/°F

pe		Cooling capacity			COP	EER	P	I	ṁ
[°C]	[°F]	[W]	[Btu/h]	[kcal/h]	[W/W]	[Btu/Wh]	[W]	[A]	[kg/h]
-35	-31	**203**	692	174	**1.08**	3.70	187	1.48	2.28
-30	-22	**261**	890	224	**1.24**	4.24	210	1.54	2.95
-20	-4	**411**	1402	353	**1.62**	5.53	254	1.67	4.68
-10	14	**611**	2086	526	**2.06**	7.03	297	1.81	7.02
0	32	**867**	2958	746	**2.56**	8.74	338	1.97	10.08
7.2	45	**1088**	3713	936	**2.96**	10.11	367	2.08	12.80

pc= 55/131 | RGT= 32/89.6 | Tliq= 55/131 | °C/°F

-35	-31	**165**	562	142	**0.90**	3.05	184	1.48	2.05
-30	-22	**216**	737	186	**1.01**	3.46	213	1.55	2.70
-20	-4	**350**	1192	301	**1.29**	4.42	270	1.73	4.40
-10	14	**528**	1802	454	**1.63**	5.56	324	1.91	6.71
0	32	**757**	2583	651	**2.02**	6.89	375	2.11	9.76
7.2	45	**956**	3262	822	**2.33**	7.95	410	2.25	12.49

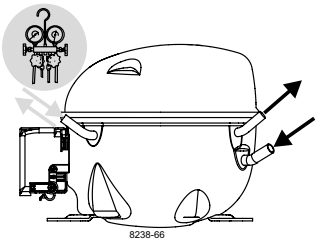

KL Compressors

SECOP

Keep electrical equipment clear from oil, chemicals, and water

When operated with a flammable refrigerant, only spark-proof starting equipment is allowed.

RSIR

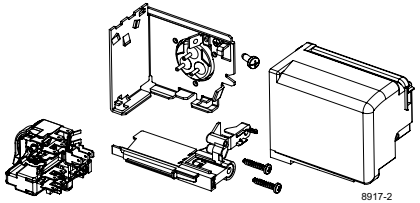

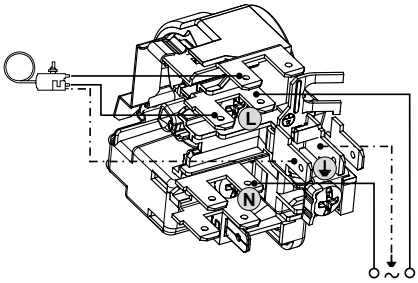

RSCR

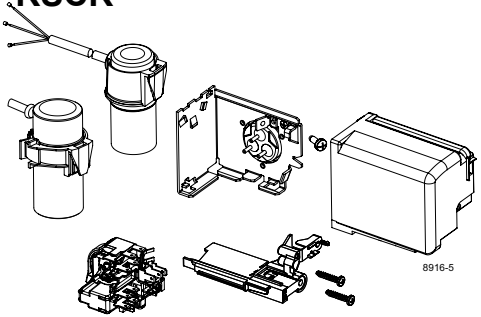

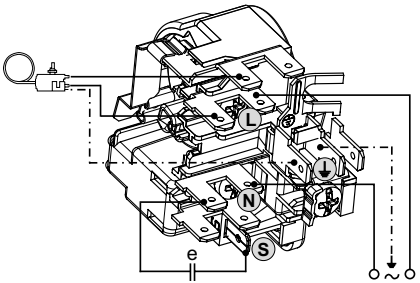

CSIR

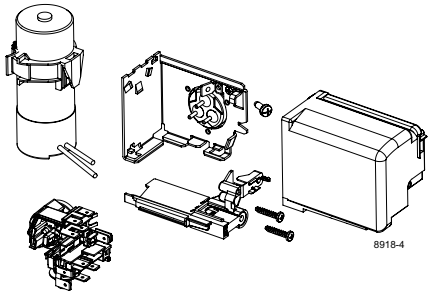

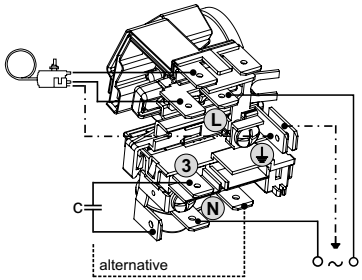

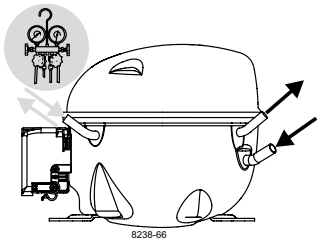

KL Compressors

SECOP

Keep electrical equipment clear from oil, chemicals, and water

When operated with a flammable refrigerant, only spark-proof starting equipment is allowed.

Service/Repair – R290, R600a, R170, R1270, R1234yf

(applies to all flammable refrigerants)



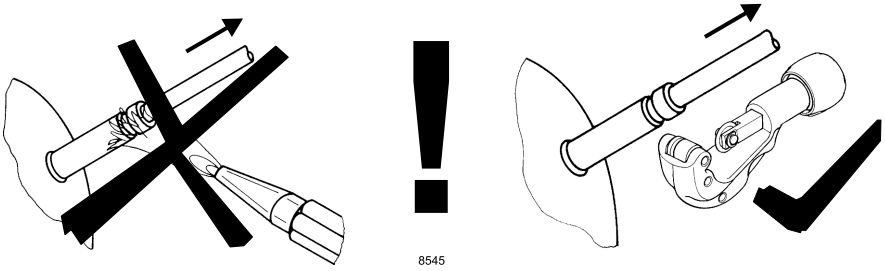

Dismantling, recycling, disposal: At the end of a compressor's lifecycle, proceed by separating and storing components according to their environmental impact. Parts that may cause pollution must be clearly identified and handled separately, ensuring appropriate disposal. Refrigerant gas must not be released into the environment and should be recovered by qualified operators. Compressor oil must also be collected separately. The compressor should be disposed of at specialized disposal centers in accordance with the applicable regulations. **Subject to modifications/alterations. www.secop.com**