Single
Packs

Single Pack KLF7.7CNHS 115-127V 60Hz CSIR

Single pack code number: **195B4846**

Position	Title	Code	Amount
1	Compressor KLF7.7CNHS	106H3803	1
2	Starting capacitor (240µF 125V, 6.3mm)	117U5002	1
3	Starting relay (QLZ-17.3A, overload protector T1141/L6)	117U7078	1
4	KL accessories	103N1060	1
5	Bolt joint for one compressor | M6 | ø16mm	118-1917	1

Secop GmbH • Lise-Meitner-Straße 29 • 24941 Flensburg, Germany • Tel: +49 461 4941 0 • **www.secop.com**

Secop accepts no responsibility for possible errors in catalogs, brochures, and other printed material. Secop reserves the right to alter its products without notice. This also applies to products already on order provided that such alterations can be made without subsequential changes being necessary to specifications already agreed. All trademarks in this material are the property of the respective companies. Secop and the Secop logotype are trademarks of Secop GmbH. All rights reserved.

Model
KLF7.7CNHS

Sales code:
106H3803

Compressor Data

Refrigerant(s)	**R290**
Refr. charge - tech. limit	**200g / 7.05oz**
Weight	**9.70 kg / 21.38lbs**
Displacement	**7.70 cm3 / 0.47cu.in**
Compressors on pallet	**100**



General – Configurations With KLF7.7CNHS

–	**Conf. 1**
Motor configuration	CSIR
Power supply (nominal)	115-127 V/60 Hz
Number of phases	1
Voltage range	95-140 V
Approvals	UL
Starting torque	HST
Refrigerant	R290
Application	LBP+MBP
Hot gas defrost	OK
Long interval pull down	OK

Application Notes

- Provision for PE Grounding is located at the PE Stamp on the compressor
- Compressor comes on a wooden pallet
- Very good robustness against liquid intake.
- Ice-cube maker optimization - indirect suction intake.

Model
KLF7.7CNHS

Sales code:
106H3803

Compressor Design

Oil type	**POE**	Winding resistance main	**1.4 Ohm**
Oil viscosity	**19,2cSt**	Winding resistance aux	**5.9 Ohm**
Oil quantity	**170 / 5.75fl.oz**	Max. winding temp.	**125 °C**
Free gas volume comp.	**1,575 cm3 / 53.26fl.oz**	Max. discharge temp.	**130°C / 266°F**
Motor protection	**external**		

Compressor Dimensions

Housing

A Height	**182mm / 7.17in**
B Height	**175mm / 6.89in**
C Length shell	**198mm / 7.80in**
D Length w. cover	**238mm / 9.37in**
E Width	**160mm / 6.30in**

Find 3D Model here

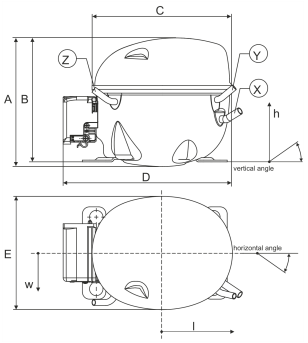

Connectors	Suction X	Discharge Y	Process Z
Diameter [mm]	øi 8.11–8.29 / 0.32–0.33in	øi 6.41–6.59 / 0.25–0.26in	øi 6.41–6.59 / 0.25–0.26in
Material	CU	CU	CU
Horizontal angle ±2°	35°	13°	0°
Vertical angle ±2°	30°	40°	145°
Position l/h/w [mm]	119/73/59 / 4.69/2.87/2.32in	117/107/66 / 4.61/4.21/2.60in	-88/101/71 / -3.46/3.98/2.80in
Straight tube l. [mm]	13.5 / 0.53in	13.5 / 0.53in	13.5 / 0.53in

Mounting Accessories

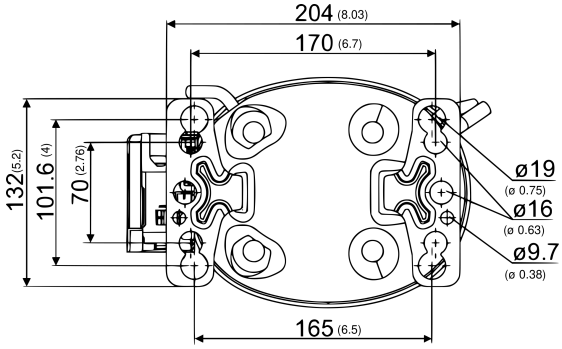

Dimensions in mm [in]

Bolt joint

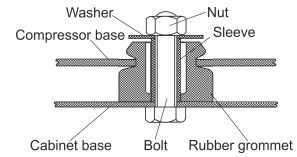

Snap-on

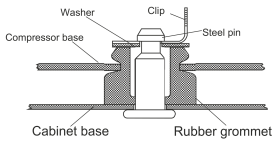

	one comp.	multi pack
Bolt joint | M6 | ø16mm	118-1917	118-1918
Bolt joint | ø1/4" | ø16mm	118-1946	–
Bolt joint | ø1/4" | ø19mm	118-1949	–
Snap-on | ø7,3 | ø16mm	118-1947	118-1919

Model
KLF7.7CNHS Configuration 1

Sales code:
106H3803

Configuration

Motor configuration	**CSIR**
Power supply (nominal)	**115-127 V/60 Hz 1~**
Refrigerant	**R290**
Application	**LBP+MBP**
Voltage range	**95-140 V**
Starting torque	**HST**
Approvals	**UL**
Starting device type	**relay**
Run capacitor	**-/-**
Start capacitor	**240 µF**
LRA (locked rotor amps / 4s/ U(N))	**35.6 A**
RLA (rated load amps / 1s/ U(N))	**4.9 A**

Ambient/ machine room temperatures minimum /maximum
Ambient temperature range: 10 - 43°C / 50 - 109°F
Machine room temp. compressor: 10 - 48°C / 50 - 118°F

System Cooling
fan 3m/s

Electrical Accessories / Wiring Diagram

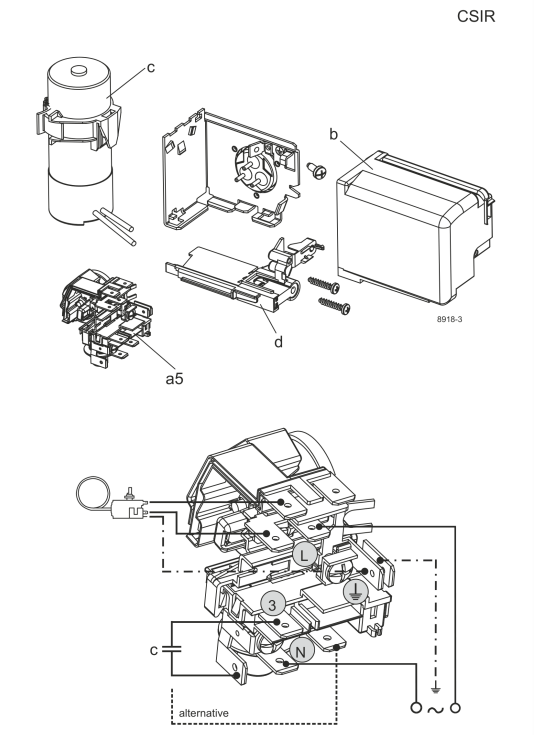

View full size

Components
a5 current relay (T1141/L6-S6) 117U7078
c start capacitor (240µF) 117U5002
b, d cover + clamp + screws (5VA-compl.) 103N0600

Alternative components
b, d 100x cover + clamp + screws (5VA) 103N2060
b, d cover + clamp + screws (5VA) in bag 103N1060

Operation Pressure Range

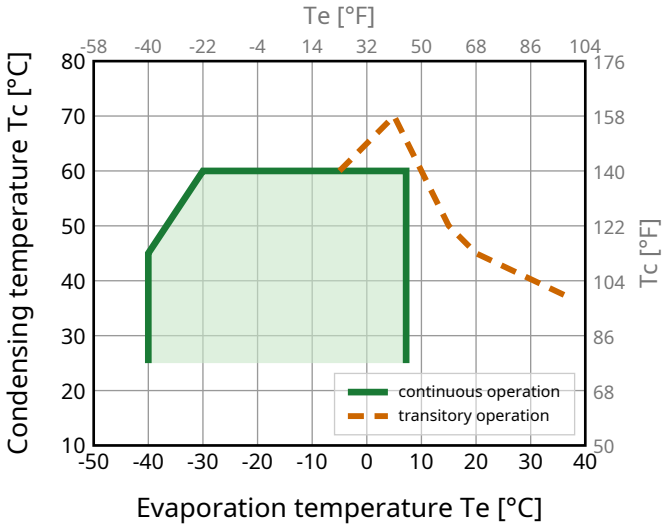

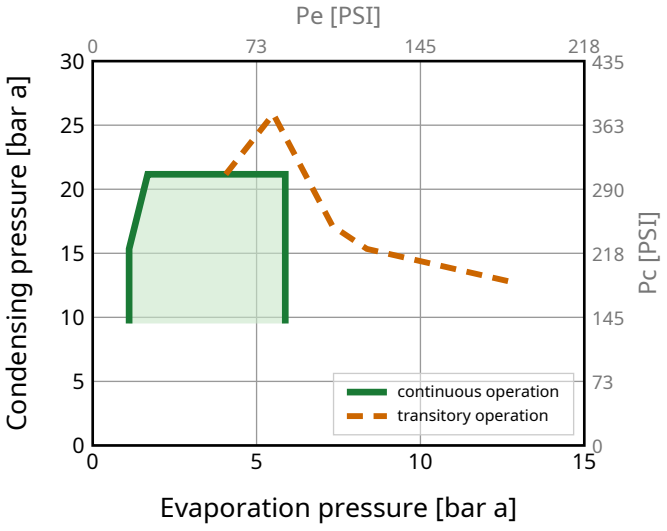

Model
KLF7.7CNHS Configuration 1

Sales code:
106H3803

Standard Conditions

R290, 115 V/60 Hz, CSIR, fan 3m/s

pe	pc	RGT	Tliq	Cooling capacity			COP	EER	P	I	ṁ	
[°C] [°F]	[°C] [°F]	[°C] [°F]	[°C] [°F]	[W]	[Btu/h]	[kcal/h]	[W/W]	[Btu/Wh]	[W]	[A]	[kg/h]	
-23.3 -10	54.4 129.9	32.2 90	32.2 90	**445**	1517	382	**1.50**	5.11	297	3.46	4.52	**ASHRAE LBP**
-25 -13	55 131	32 89.6	55 131	**334**	1138	287	**1.16**	3.97	286	3.39	4.18	**CECOMAF LBP**
-35 -31	40 104	20 68	40 104	**257**	876	221	**1.24**	4.22	208	2.89	2.95	**EN12900 LBP**
-6.7 20	54.4 129.9	35 95	46.1 115	**785**	2680	675	**1.95**	6.64	403	4.26	8.99	**ASHRAE MBP**
-10 14	55 131	32 89.6	55 131	**624**	2129	537	**1.61**	5.51	386	4.13	7.94	**CECOMAF MBP**
-10 14	45 113	20 68	45 113	**720**	2458	620	**1.98**	6.74	364	3.96	8.87	**EN12900 MBP**

Performance Tables

R290, 115 V/60 Hz, CSIR, fan 3m/s

pc= 45/113 | RGT= 32/89.6 | Tliq= 45/113 | °C/°F

pe		Cooling capacity			COP	EER	P	I	ṁ
[°C]	[°F]	[W]	[Btu/h]	[kcal/h]	[W/W]	[Btu/Wh]	[W]	[A]	[kg/h]
-40	-40	**174**	595	150	**1.00**	3.42	174	2.69	1.96
-30	-22	**313**	1069	270	**1.29**	4.42	242	3.10	3.54
-20	-4	**500**	1708	430	**1.63**	5.55	308	3.54	5.69
-10	14	**749**	2556	644	**2.06**	7.01	364	3.96	8.60
0	32	**1072**	3657	922	**2.63**	8.96	408	4.30	12.46
7.2	45	**1358**	4633	1168	**3.17**	10.82	428	4.46	15.97

pc= 55/131 | RGT= 32/89.6 | Tliq= 55/131 | °C/°F

-40	-40	**155**	527	133	**0.86**	2.93	180	2.72	1.92
-30	-22	**264**	900	227	**1.05**	3.59	251	3.15	3.29
-20	-4	**416**	1419	358	**1.29**	4.41	322	3.64	5.23
-10	14	**624**	2129	537	**1.61**	5.51	386	4.13	7.94
0	32	**902**	3076	775	**2.04**	6.98	441	4.56	11.62
7.2	45	**1152**	3929	990	**2.45**	8.36	470	4.80	15.04

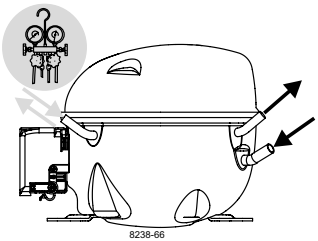

KL Compressors

SECOP

Keep electrical equipment clear from oil, chemicals, and water

When operated with a flammable refrigerant, only spark-proof starting equipment is allowed.

RSIR

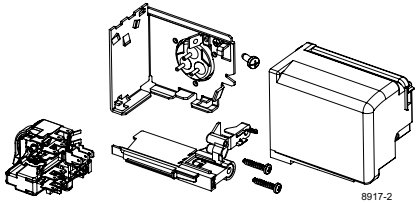

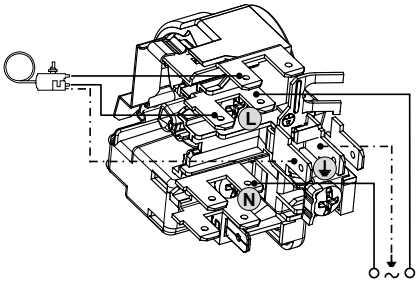

RSCR

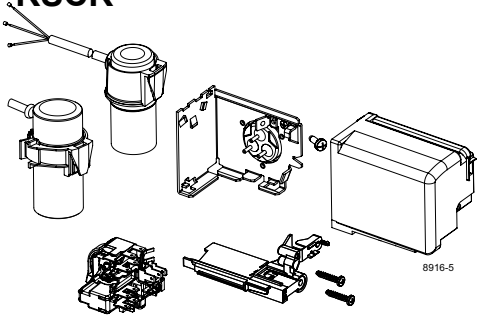

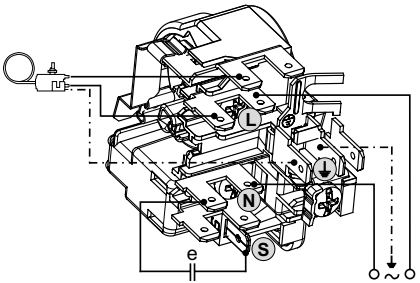

CSIR

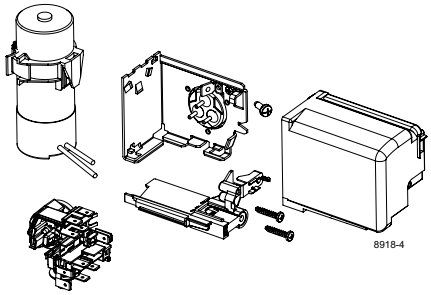

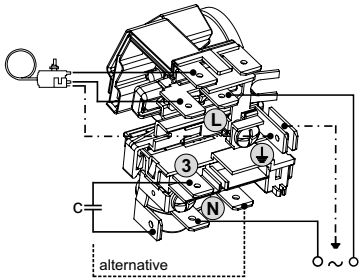

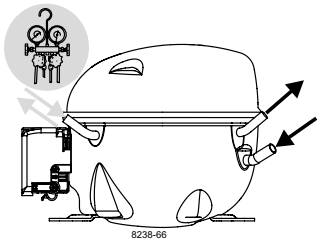

KL Compressors

SECOP

Keep electrical equipment clear from oil, chemicals, and water

When operated with a flammable refrigerant, only spark-proof starting equipment is allowed.

Service/Repair – R290, R600a, R170, R1270, R1234yf

(applies to all flammable refrigerants)



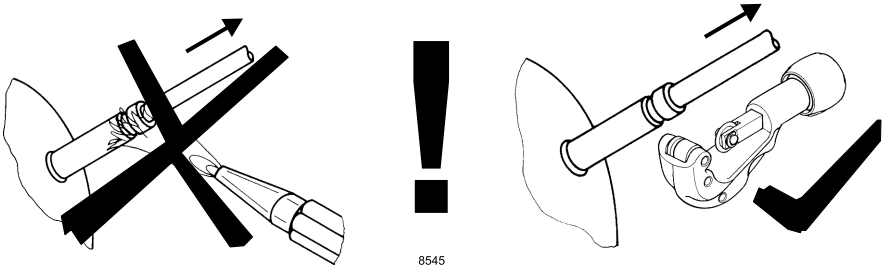

Dismantling, recycling, disposal: At the end of a compressor's lifecycle, proceed by separating and storing components according to their environmental impact. Parts that may cause pollution must be clearly identified and handled separately, ensuring appropriate disposal. Refrigerant gas must not be released into the environment and should be recovered by qualified operators. Compressor oil must also be collected separately. The compressor should be disposed of at specialized disposal centers in accordance with the applicable regulations. **Subject to modifications/alterations. www.secop.com**