Single
Packs

Single Pack MS18UVULTM 220-240V 50Hz / 208-230V 60Hz PM

Single pack code number: **195B4847**

Position	Title	Code	Amount
1	Compressor MS18UVULTM	104M0825	1
2	Electronic unit SLVE	105N4933	1
3	Cover	103N2008	1
4	Bolt joint for one compressor | M6 | ø16mm	118-1958	1

Secop GmbH • Lise-Meitner-Straße 29 • 24941 Flensburg, Germany • Tel: +49 461 4941 0 • **www.secop.com**

Secop accepts no responsibility for possible errors in catalogs, brochures, and other printed material. Secop reserves the right to alter its products without notice. This also applies to products already on order provided that such alterations can be made without subsequential changes being necessary to specifications already agreed. All trademarks in this material are the property of the respective companies. Secop and the Secop logotype are trademarks of Secop GmbH. All rights reserved.

Model
MS18UVULTM

Sales code:
104M0825

Compressor Data

Refrigerant(s)	**R290 / R170 / R1270**
Refr. charge - tech. limit	**550g / 19.40oz**
Weight	**14.20 kg / 31.31lbs**
Displacement	**17.69 cm3 / 1.08cu.in**
Compressors on pallet	**80**



General – Configurations With MS18UVULTM and Controller

–	**Conf. 1**	**Conf. 2**	**Conf. 3**
Sales code single pack:	105N4932	105N4932	105N4932
Power supply (nominal)	100-240 V,50/60 Hz	100-240 V,50/60 Hz	100-240 V,50/60 Hz
Number of phases	1~AC	1~AC	1~AC
Approvals	UL, VDE, CCC	UL, VDE, CCC	UL, VDE
Starting torque	HST	HST	HST
Refrigerant	R170	R290	R1270
Application	ULT	L+MBP	VLBP
Hot gas defrost	OK	OK	OK
Long interval pull down	OK	OK	OK
Protection	Mechanic	Mechanic	Mechanic

Application Notes

- See operation limits for controller
- Provision for PE Grounding is located at the PE Stamp on the compressor
- Direct suction intake with telescope
- U:100-240 V LBP; 208-240 V MBP; 50/60 Hz
- Good robustness against liquid intake.
- Compressor for laboratory and medical applications.
- Check special warranty terms with Secop Sales.

Model
MS18UVULTM

Sales code:
104M0825

Compressor Design

Oil type	**POE**	Motor protection	**internal**
Oil viscosity	**32cSt**	Winding resistance main	**3.850 Ohm**
Oil quantity	**473 / 15.99fl.oz**	Max. winding temp.	**125 °C**
Free gas volume comp.	**1,460 cm3 / 49.37fl.oz**	Max. discharge temp.	**130°C / 266°F**

Compressor Dimensions

Housing

A Height	**219.9mm / 8.66in**
B Height	**214mm / 8.43in**
C Length shell	**217mm / 8.54in**
D Length w. cover	**257.6mm / 10.14in**
E Width	**161.1mm / 6.34in**

Find 3D Model here

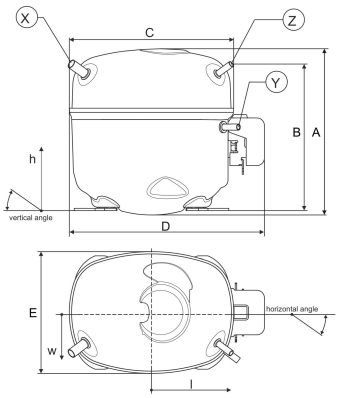

Connectors	Suction X	Discharge Y	Process Z
Diameter [mm]	øi 10.11–10.29 / 0.40–0.41in	øi 6.11–6.29 / 0.24–0.25in	øi 6.11–6.29 / 0.24–0.25in
Material	CU	CU	CU
Horizontal angle ±2°	37°	37°	37°
Vertical angle ±2°	30°	0°	30°
Position l/h/w [mm]	-106/193/56.7 / -4.17/7.60/2.23in	113.7/110/81 / 4.48/4.33/3.19in	106/94.3/72 / 4.17/3.71/2.83in
Straight tube l. [mm]	12 / 0.47in	12 / 0.47in	12 / 0.47in

Mounting Accessories

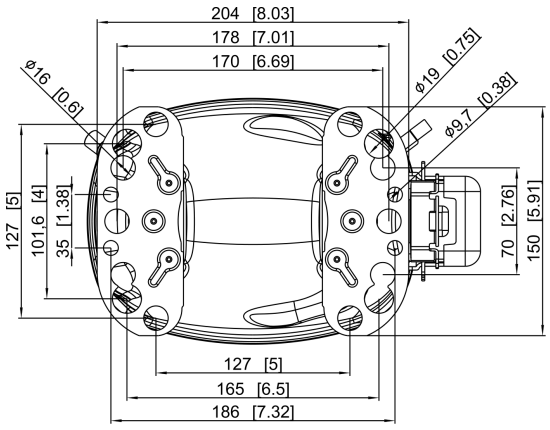

Dimensions in mm [in]

Bolt joint

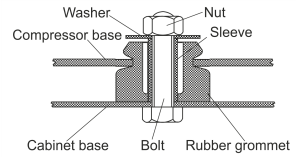

Snap-on

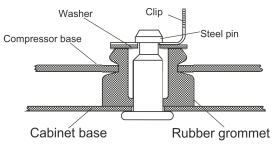

	one comp.	multi pack
Bolt joint | M6 | ø16mm	118-1958	118-1961
Snap-on | ø7,3 | ø16mm	–	118-1962

Model
MS18UVULTM System Design

Sales code:
104M0825

System Design

Operation Pressure Range R170

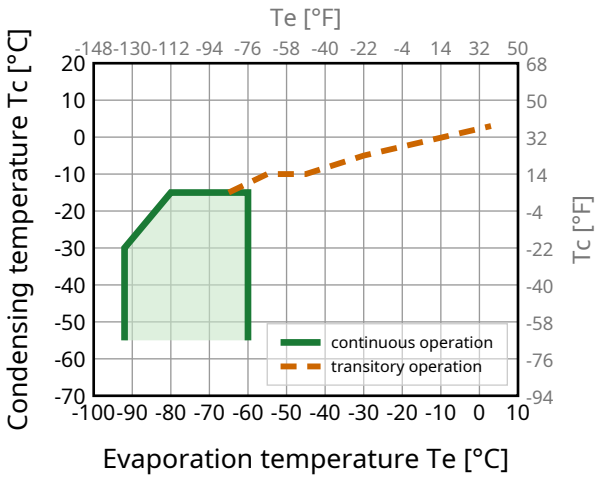

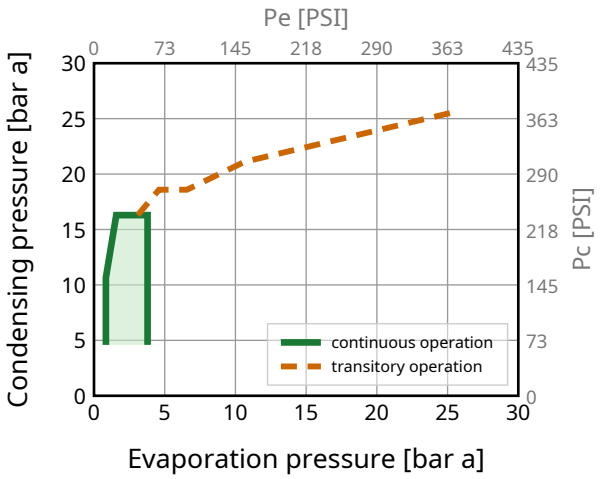

Operation Pressure Range R290

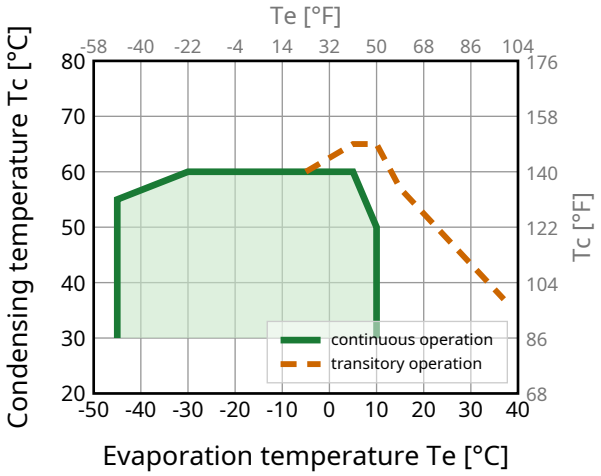

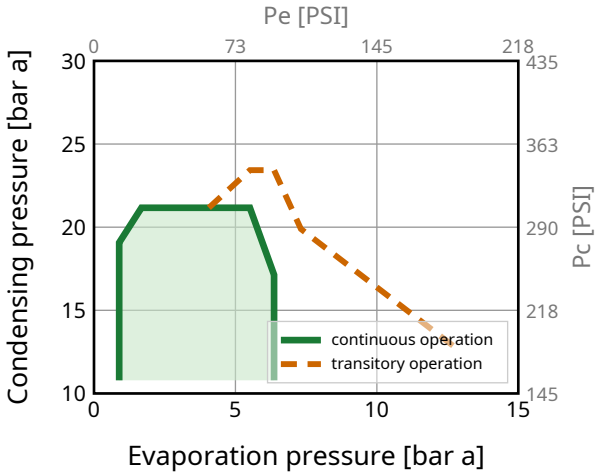

Operation Pressure Range R1270

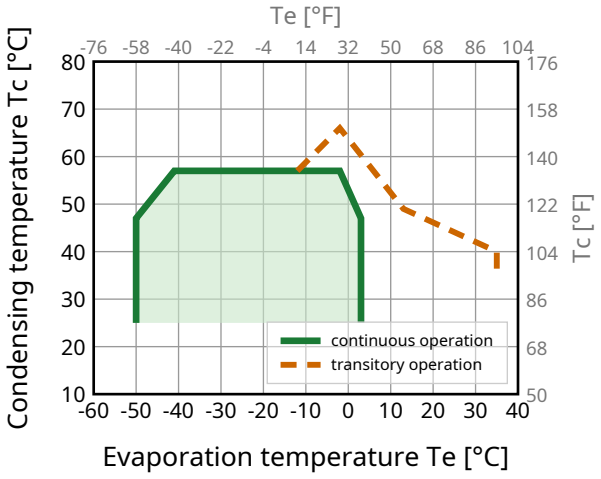

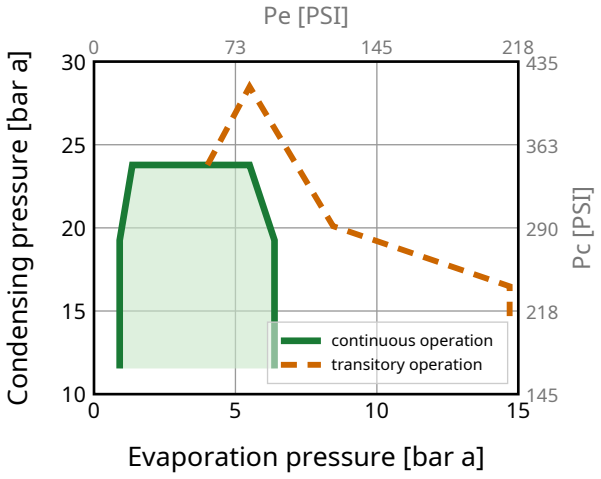

Model
MS18UVULTM

Sales code:
104M0825

System Cooling

Compressor and Controller Cooling: fan 3m/s

Ensure proper airflow of 3 m/s at both compressor and electronic units.

The airflow for the electronics must be directed to the heat sink.

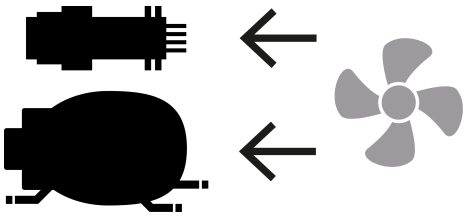

Accessories (Compressor + Controller)

103N2008	plastic cover	1 pcs

Operation Limits

Suctiongas temperature < +20 °C (contininous operation)

Model

MS18UVULTM Controller Overview

Sales code:

104M0825

Controller Overview

–	**Conf. 1, 2, 3**
Sales code single pack:	105N4932
Sales code industry pack:	105N4933 (8)
Voltage nom.:	100-240 V,50/60 Hz
Voltage range	90–150/180–270 V
Max output power	1100 W
Compressor speed range:	2200-4500 rpm
Cable length:	915 mm
Protection class:	IP54
LRA (Locked Rotor Amperage):	2,9 A
AEO and Defrost pin	Yes
Frequency input	Yes
Modbus input	SWI
Controller Wiring	» Controller Wiring

Controller Dimensions

Conf. 1, 2, 3

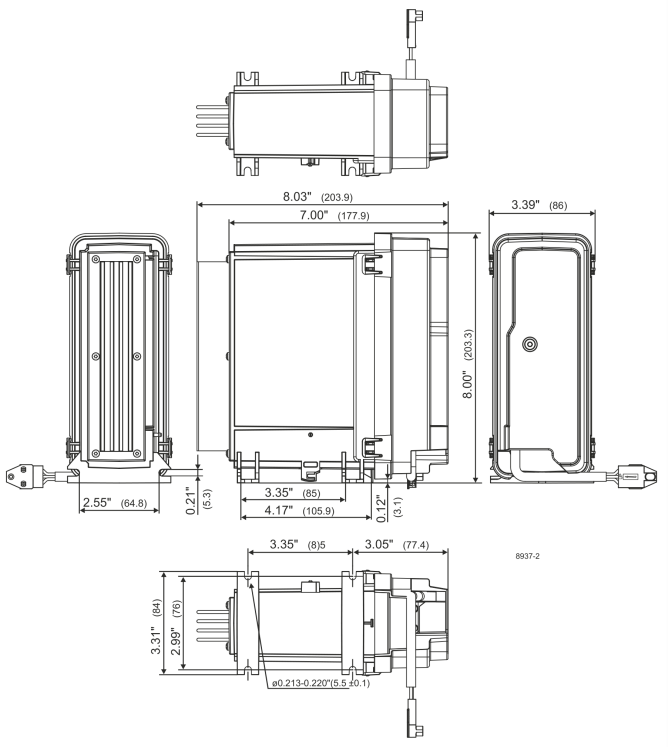

Operating Instructions

For proper installation and operation of variable-speed compressors and controllers, please refer to the Operating Instructions. The document covers electrical installation, speed control, and technical data for the controller.

» Download Operating Instructions

Model
MS18UVULTM

Sales code:
104M0825

Standard Conditions — 2200 rpm

R170, 220 V/50 Hz, fan 3m/s

pe	pc	RGT	Tliq	Cooling capacity			COP	EER	P	I	ṁ	
[°C] [°F]	[°C] [°F]	[°C] [°F]	[°C] [°F]	[W]	[Btu/h]	[kcal/h]	[W/W]	[Btu/Wh]	[W]	[A]	[kg/h]	
-85 -121	-35 -31	10 50	-15 5	**326**	1113	281	**1.42**	4.86	229	1.14	2.65	**ULT 1**
-85 -121	-40 -40	10 50	-20 -4	**351**	1199	302	**1.62**	5.53	217	1.08	2.76	**ULT 2**
-85 -121	-45 -49	10 50	-25 -13	**376**	1282	323	**1.85**	6.31	203	1.01	2.86	**ULT 3**
-95 -139	-35 -31	10 50	-30 -22	**168**	575	145	**1.06**	3.60	160	0.79	1.24	**ULT 4**
-95 -139	-40 -40	10 50	-35 -31	**188**	640	161	**1.22**	4.16	154	0.77	1.34	**ULT 5**
-95 -139	-45 -49	10 50	-40 -40	**207**	706	178	**1.41**	4.80	147	0.73	1.44	**ULT 6**

Performance Tables — 2200 rpm

R170, 220 V/50 Hz, fan 3m/s

pc= -35/-31 | RGT= 10/50 | Tliq= -35/-31 | °C/°F

pe		Cooling capacity			COP	EER	P	I	ṁ
[°C]	[°F]	[W]	[Btu/h]	[kcal/h]	[W/W]	[Btu/Wh]	[W]	[A]	[kg/h]
-92	-134	**227**	774	195	**1.26**	4.31	180	0.89	1.62
-90	-130	**265**	903	228	**1.37**	4.66	194	0.96	1.90
-85	-121	**376**	1284	324	**1.64**	5.61	229	1.14	2.70
-80	-112	**514**	1754	442	**1.96**	6.67	263	1.30	3.69
-75	-103	**681**	2325	586	**2.33**	7.94	293	1.44	4.91
-70	-94	**881**	3005	757	**2.79**	9.53	315	1.55	6.35
-65	-85	**1115**	3804	959	**3.40**	11.61	328	1.61	8.07
-60	-76	**1388**	4734	1193	**4.24**	14.48	327	1.61	10.07

pc= -25/-13 | RGT= 10/50 | Tliq= -25/-13 | °C/°F

-92	-134	**184**	629	158	**0.98**	3.33	189	0.94	1.40
-90	-130	**219**	749	189	**1.07**	3.65	205	1.02	1.67
-85	-121	**323**	1103	278	**1.30**	4.44	248	1.23	2.46
-80	-112	**452**	1544	389	**1.54**	5.26	294	1.45	3.45
-75	-103	**610**	2081	525	**1.81**	6.16	338	1.66	4.66
-70	-94	**799**	2726	687	**2.11**	7.21	378	1.85	6.12
-65	-85	**1022**	3488	879	**2.48**	8.48	411	2.01	7.85
-60	-76	**1283**	4377	1103	**2.95**	10.06	435	2.12	9.89

Model
MS18UVULTM

Sales code:
104M0825

Standard Conditions — 4500 rpm

R170, 220 V/50 Hz, fan 3m/s

pe	pc	RGT	Tliq	Cooling capacity			COP	EER	P	I	ṁ	
[°C] [°F]	[°C] [°F]	[°C] [°F]	[°C] [°F]	[W]	[Btu/h]	[kcal/h]	[W/W]	[Btu/Wh]	[W]	[A]	[kg/h]	
-85 -121	-35 -31	10 50	-15 5	**585**	1995	503	**1.38**	4.71	424	2.10	4.76	**ULT 1**
-85 -121	-40 -40	10 50	-20 -4	**627**	2140	539	**1.56**	5.33	402	2.00	4.93	**ULT 2**
-85 -121	-45 -49	10 50	-25 -13	**668**	2279	574	**1.77**	6.06	376	1.87	5.09	**ULT 3**
-95 -139	-35 -31	10 50	-30 -22	**305**	1040	262	**1.02**	3.50	297	1.48	2.25	**ULT 4**
-95 -139	-40 -40	10 50	-35 -31	**340**	1159	292	**1.18**	4.03	287	1.43	2.43	**ULT 5**
-95 -139	-45 -49	10 50	-40 -40	**374**	1276	322	**1.36**	4.65	274	1.37	2.60	**ULT 6**

Performance Tables — 4500 rpm

R170, 220 V/50 Hz, fan 3m/s

pc= -35/-31 | RGT= 10/50 | Tliq= -35/-31 | °C/°F

pe		Cooling capacity			COP	EER	P	I	ṁ
[°C]	[°F]	[W]	[Btu/h]	[kcal/h]	[W/W]	[Btu/Wh]	[W]	[A]	[kg/h]
-92	-134	**410**	1398	352	**1.22**	4.17	335	1.67	2.94
-90	-130	**478**	1629	411	**1.32**	4.52	360	1.79	3.42
-85	-121	**675**	2302	580	**1.59**	5.43	424	2.10	4.84
-80	-112	**916**	3124	787	**1.90**	6.47	482	2.39	6.58
-75	-103	**1206**	4113	1037	**2.26**	7.72	533	2.63	8.68
-70	-94	**1550**	5288	1333	**2.71**	9.26	571	2.81	11.18
-65	-85	**1954**	6665	1680	**3.29**	11.24	593	2.92	14.13
-60	-76	**2422**	8264	2083	**4.08**	13.91	594	2.92	17.57

pc= -25/-13 | RGT= 10/50 | Tliq= -25/-13 | °C/°F

-92	-134	**331**	1130	285	**0.95**	3.23	349	1.74	2.52
-90	-130	**395**	1349	340	**1.04**	3.56	379	1.88	3.01
-85	-121	**583**	1988	501	**1.28**	4.36	456	2.26	4.44
-80	-112	**812**	2769	698	**1.52**	5.18	535	2.64	6.19
-75	-103	**1088**	3712	936	**1.78**	6.09	610	3.00	8.31
-70	-94	**1416**	4833	1218	**2.09**	7.13	678	3.33	10.85
-65	-85	**1802**	6150	1550	**2.45**	8.37	734	3.60	13.85
-60	-76	**2252**	7682	1936	**2.90**	9.90	776	3.79	17.35

Model
MS18UVULTM

Sales code:
104M0825

Optimal Performance

R170, 220 V/50 Hz, fan 3m/s
Shows the speed (RPM) that achieves the highest COP at each standard condition.

pe	pc	RGT	Tliq	Cooling capacity			COP	EER	P	RPM	
[°C] [°F]	[°C] [°F]	[°C] [°F]	[°C] [°F]	[W]	[Btu/h]	[kcal/h]	[W/W]	[Btu/Wh]	[W]	[rpm]	
-85 -121	-35 -31	10 50	-15 5	**445**	1518	383	**1.45**	4.96	306	**3000**	**ULT 1**
-85 -121	-40 -40	10 50	-20 -4	**479**	1635	412	**1.65**	5.64	290	**3000**	**ULT 2**
-85 -121	-45 -49	10 50	-25 -13	**512**	1749	441	**1.89**	6.44	272	**3000**	**ULT 3**
-95 -139	-35 -31	10 50	-30 -22	**230**	784	198	**1.08**	3.68	213	**3000**	**ULT 4**
-95 -139	-40 -40	10 50	-35 -31	**256**	873	220	**1.25**	4.26	205	**3000**	**ULT 5**
-95 -139	-45 -49	10 50	-40 -40	**282**	963	243	**1.44**	4.93	195	**3000**	**ULT 6**

Cooling Capacity vs. COP

R170, 220 V/50 Hz, fan 3m/s

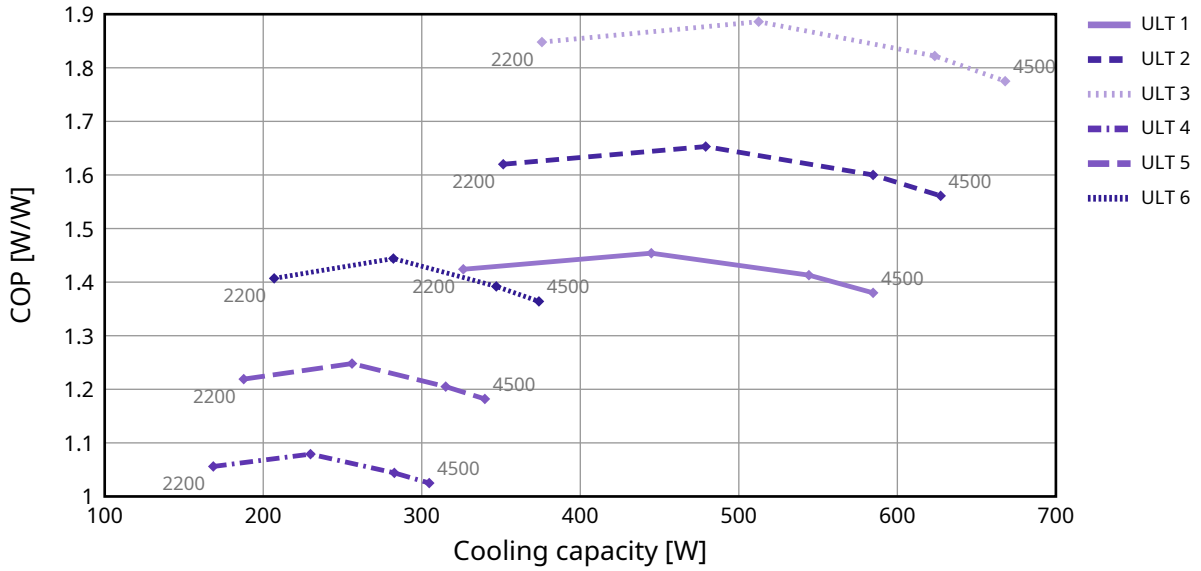

Model
MS18UVULTM

Sales code:
104M0825

Standard Conditions — 2200 rpm

R290, 220 V/50 Hz, fan 3m/s

pe	pc	RGT	Tliq	Cooling capacity			COP	EER	P	I	ṁ	
[°C] [°F]	[°C] [°F]	[°C] [°F]	[°C] [°F]	[W]	[Btu/h]	[kcal/h]	[W/W]	[Btu/Wh]	[W]	[A]	[kg/h]	
-23.3 -10	54.4 129.9	32.2 90	32.2 90	**640**	2185	551	**1.73**	5.92	369	1.81	6.50	**ASHRAE LBP**
-25 -13	55 131	32 89.6	55 131	**474**	1617	407	**1.34**	4.58	353	1.73	5.94	**CECOMAF LBP**
-35 -31	40 104	20 68	40 104	**348**	1186	299	**1.39**	4.75	250	1.24	3.99	**EN12900 LBP**
-6.7 20	54.4 129.9	35 95	46.1 115	**1177**	4017	1013	**2.21**	7.55	532	2.58	13.48	**ASHRAE MBP**
-10 14	55 131	32 89.6	55 131	**933**	3182	802	**1.85**	6.31	505	2.45	11.86	**CECOMAF MBP**
-10 14	45 113	20 68	45 113	**1029**	3510	885	**2.27**	7.73	454	2.21	12.66	**EN12900 MBP**

Performance Tables — 2200 rpm

R290, 220 V/50 Hz, fan 3m/s

pc= 45/113 | RGT= 32/89.6 | Tliq= 45/113 | °C/°F

pe		Cooling capacity			COP	EER	P	I	ṁ
[°C]	[°F]	[W]	[Btu/h]	[kcal/h]	[W/W]	[Btu/Wh]	[W]	[A]	[kg/h]
-45	-49	**163**	555	140	**0.87**	2.96	188	0.93	1.83
-40	-40	**237**	809	204	**1.09**	3.71	218	1.08	2.67
-30	-22	**434**	1480	373	**1.47**	5.03	294	1.45	4.90
-20	-4	**706**	2410	607	**1.87**	6.38	378	1.85	8.03
-10	14	**1070**	3649	920	**2.36**	8.04	454	2.21	12.28
0	32	**1539**	5251	1323	**3.02**	10.32	509	2.47	17.89
10	50	**2129**	7265	1831	**4.04**	13.78	527	2.56	25.18

pc= 55/131 | RGT= 32/89.6 | Tliq= 55/131 | °C/°F

-45	-49	**116**	397	100	**0.61**	2.09	190	0.94	1.44
-40	-40	**184**	628	158	**0.83**	2.84	221	1.09	2.29
-30	-22	**361**	1231	310	**1.19**	4.04	305	1.50	4.51
-20	-4	**606**	2066	521	**1.50**	5.11	404	1.97	7.62
-10	14	**933**	3182	802	**1.85**	6.31	505	2.45	11.86
0	32	**1358**	4632	1168	**2.29**	7.82	592	2.86	17.51
10	50	**1895**	6467	1630	**2.91**	9.92	652	3.14	24.91

Model
MS18UVULTM

Sales code:
104M0825

Standard Conditions — 4500 rpm

R290, 220 V/50 Hz, fan 3m/s

pe	pc	RGT	Tliq	Cooling capacity			COP	EER	P	I	ṁ	
[°C] [°F]	[°C] [°F]	[°C] [°F]	[°C] [°F]	[W]	[Btu/h]	[kcal/h]	[W/W]	[Btu/Wh]	[W]	[A]	[kg/h]	
-23.3 -10	54.4 129.9	32.2 90	32.2 90	**1203**	4104	1034	**1.72**	5.87	699	3.43	12.22	**ASHRAE LBP**
-25 -13	55 131	32 89.6	55 131	**892**	3042	767	**1.33**	4.53	671	3.29	11.18	**CECOMAF LBP**
-35 -31	40 104	20 68	40 104	**655**	2235	563	**1.35**	4.62	483	2.39	7.51	**EN12900 LBP**
-6.7 20	54.4 129.9	35 95	46.1 115	**2172**	7412	1868	**2.22**	7.57	979	4.75	24.87	**ASHRAE MBP**
-10 14	55 131	32 89.6	55 131	**1727**	5893	1485	**1.85**	6.32	932	4.53	21.97	**CECOMAF MBP**
-10 14	45 113	20 68	45 113	**1893**	6458	1628	**2.27**	7.73	835	4.07	23.30	**EN12900 MBP**

Performance Tables — 4500 rpm

R290, 220 V/50 Hz, fan 3m/s

pc= 45/113 | RGT= 32/89.6 | Tliq= 45/113 | °C/°F

pe		Cooling capacity			COP	EER	P	I	ṁ
[°C]	[°F]	[W]	[Btu/h]	[kcal/h]	[W/W]	[Btu/Wh]	[W]	[A]	[kg/h]
-45	-49	**300**	1024	258	**0.82**	2.80	365	1.81	3.37
-40	-40	**446**	1523	384	**1.05**	3.58	426	2.11	5.02
-30	-22	**816**	2784	702	**1.45**	4.93	564	2.78	9.22
-20	-4	**1313**	4481	1129	**1.85**	6.33	708	3.47	14.94
-10	14	**1968**	6714	1692	**2.36**	8.04	835	4.07	22.60
0	32	**2809**	9585	2416	**3.03**	10.35	926	4.50	32.67
10	50	**3867**	13195	3326	**4.03**	13.75	960	4.66	45.73

pc= 55/131 | RGT= 32/89.6 | Tliq= 55/131 | °C/°F

-45	-49	**201**	686	173	**0.55**	1.88	365	1.81	2.49
-40	-40	**340**	1158	292	**0.79**	2.70	429	2.13	4.22
-30	-22	**681**	2324	586	**1.16**	3.97	585	2.88	8.51
-20	-4	**1134**	3869	975	**1.49**	5.09	760	3.71	14.27
-10	14	**1727**	5893	1485	**1.85**	6.32	932	4.53	21.97
0	32	**2491**	8499	2142	**2.30**	7.85	1082	5.24	32.12
10	50	**3454**	11786	2971	**2.91**	9.92	1188	5.74	45.39

Model
MS18UVULTM

Sales code:
104M0825

Optimal Performance

R290, 220 V/50 Hz, fan 3m/s
Shows the speed (RPM) that achieves the highest COP at each standard condition.

pe	pc	RGT	Tliq	Cooling capacity			COP	EER	P	RPM	
[°C] [°F]	[°C] [°F]	[°C] [°F]	[°C] [°F]	[W]	[Btu/h]	[kcal/h]	[W/W]	[Btu/Wh]	[W]	[rpm]	
-23.3 -10	54.4 129.9	32.2 90	32.2 90	**873**	2979	751	**1.79**	6.09	489	**3000**	**ASHRAE LBP**
-25 -13	55 131	32 89.6	55 131	**646**	2204	556	**1.38**	4.71	468	**3000**	**CECOMAF LBP**
-35 -31	40 104	20 68	40 104	**474**	1617	408	**1.42**	4.86	333	**3000**	**EN12900 LBP**
-6.7 20	54.4 129.9	35 95	46.1 115	**1606**	5478	1381	**2.29**	7.80	702	**3000**	**ASHRAE MBP**
-10 14	55 131	32 89.6	55 131	**1272**	4339	1094	**1.91**	6.52	666	**3000**	**CECOMAF MBP**
-10 14	45 113	20 68	45 113	**1403**	4787	1206	**2.34**	7.99	599	**3000**	**EN12900 MBP**

Cooling Capacity vs. COP

R290, 220 V/50 Hz, fan 3m/s

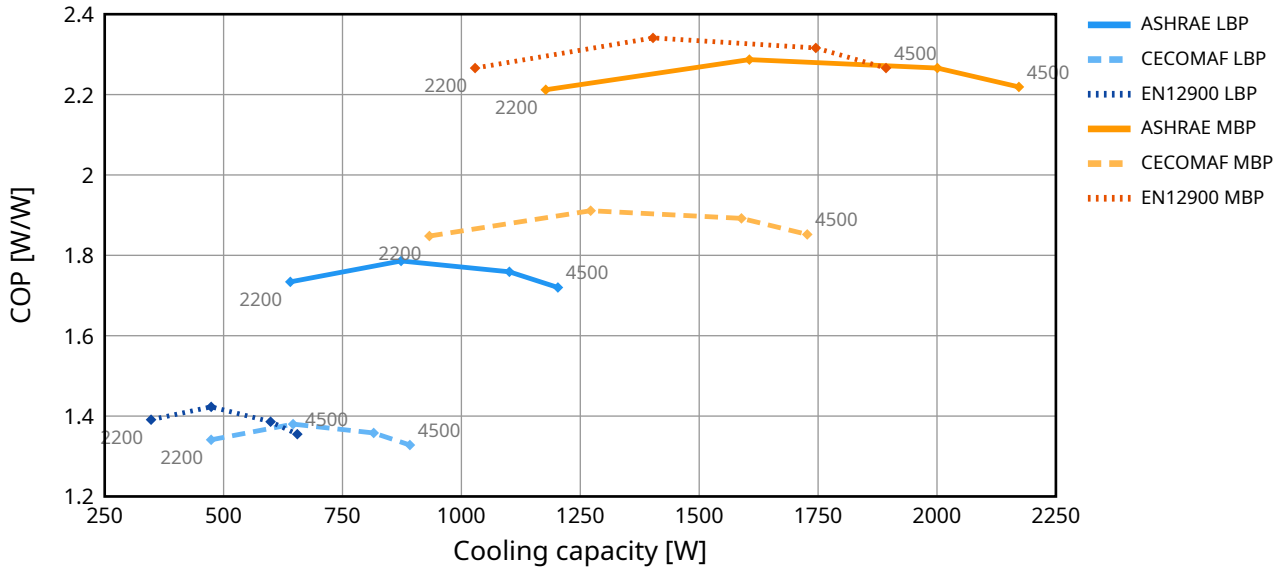

Model
MS18UVULTM

Sales code:
104M0825

Standard Conditions — 2200 rpm

R1270, 220 V/50 Hz, fan 3m/s

pe	pc	RGT	Tliq	Cooling capacity			COP	EER	P	I	ṁ	
[°C] [°F]	[°C] [°F]	[°C] [°F]	[°C] [°F]	[W]	[Btu/h]	[kcal/h]	[W/W]	[Btu/Wh]	[W]	[A]	[kg/h]	
-23.3 -10	54.4 129.9	32.2 90	32.2 90	**774**	2640	665	**1.63**	5.57	474	2.31	7.80	**ASHRAE LBP**
-25 -13	55 131	32 89.6	55 131	**577**	1970	496	**1.27**	4.33	454	2.21	7.15	**CECOMAF LBP**
-35 -31	40 104	20 68	40 104	**429**	1465	369	**1.36**	4.63	316	1.56	4.85	**EN12900 LBP**
-23.3 -10	48.8 119.8	4.4 39.9	48.8 119.8	**641**	2186	551	**1.40**	4.79	456	2.22	8.68	**ARI540 LBP**
-23.3 -10	40.6 105.1	32.2 90	32.2 90	**836**	2852	719	**1.97**	6.73	424	2.07	8.43	**AHAM LBP**
-35 -31	45 113	32 89.6	45 113	**406**	1384	349	**1.25**	4.27	324	1.59	4.52	**opt LBP**

Performance Tables — 2200 rpm

R1270, 220 V/50 Hz, fan 3m/s

pc= 35/95 | RGT= 32/89.6 | Tliq= 35/95 | °C/°F

pe		Cooling capacity			COP	EER	P	I	ṁ
[°C]	[°F]	[W]	[Btu/h]	[kcal/h]	[W/W]	[Btu/Wh]	[W]	[A]	[kg/h]
-50	-58	**184**	628	158	**0.98**	3.35	187	0.93	1.87
-40	-40	**360**	1227	309	**1.36**	4.63	265	1.31	3.67
-30	-22	**615**	2097	529	**1.77**	6.03	348	1.71	6.31
-20	-4	**965**	3293	830	**2.28**	7.79	423	2.06	9.98
-10	14	**1426**	4867	1227	**3.00**	10.23	476	2.31	14.90
0	32	**2015**	6875	1733	**4.07**	13.89	495	2.40	21.32
3	37	**2219**	7570	1908	**4.51**	15.39	492	2.39	23.59

pc= 45/113 | RGT= 32/89.6 | Tliq= 45/113 | °C/°F

-50	-58	**141**	481	121	**0.75**	2.57	187	0.93	1.56
-40	-40	**300**	1024	258	**1.09**	3.72	275	1.36	3.34
-30	-22	**531**	1812	457	**1.42**	4.83	375	1.84	5.94
-20	-4	**850**	2902	731	**1.79**	6.12	474	2.31	9.58
-10	14	**1273**	4344	1095	**2.28**	7.77	559	2.71	14.50
0	32	**1816**	6195	1562	**2.94**	10.04	617	2.98	20.97
3	37	**2004**	6838	1724	**3.20**	10.91	627	3.02	23.27

Model
MS18UVULTM

Sales code:
104M0825

Standard Conditions — 4500 rpm

R1270, 220 V/50 Hz, fan 3m/s

pe	pc	RGT	Tliq	Cooling capacity			COP	EER	P	I	ṁ	
[°C] [°F]	[°C] [°F]	[°C] [°F]	[°C] [°F]	[W]	[Btu/h]	[kcal/h]	[W/W]	[Btu/Wh]	[W]	[A]	[kg/h]	
-23.3 -10	54.4 129.9	32.2 90	32.2 90	**1389**	4738	1194	**1.67**	5.69	833	4.06	14.01	**ASHRAE LBP**
-25 -13	55 131	32 89.6	55 131	**1038**	3540	892	**1.30**	4.43	800	3.90	12.85	**CECOMAF LBP**
-35 -31	40 104	20 68	40 104	**771**	2631	663	**1.36**	4.63	568	2.80	8.72	**EN12900 LBP**
-23.3 -10	48.8 119.8	4.4 39.9	48.8 119.8	**1147**	3913	986	**1.43**	4.88	803	3.92	15.53	**ARI540 LBP**
-23.3 -10	40.6 105.1	32.2 90	32.2 90	**1490**	5083	1281	**1.98**	6.75	753	3.69	15.03	**AHAM LBP**
-35 -31	45 113	32 89.6	45 113	**730**	2490	628	**1.26**	4.30	579	2.85	8.14	**opt LBP**

Performance Tables — 4500 rpm

R1270, 220 V/50 Hz, fan 3m/s

pc= 35/95 | RGT= 32/89.6 | Tliq= 35/95 | °C/°F

pe		Cooling capacity			COP	EER	P	I	ṁ
[°C]	[°F]	[W]	[Btu/h]	[kcal/h]	[W/W]	[Btu/Wh]	[W]	[A]	[kg/h]
-50	-58	**328**	1121	282	**0.95**	3.26	344	1.71	3.34
-40	-40	**646**	2206	556	**1.34**	4.57	483	2.39	6.61
-30	-22	**1099**	3748	945	**1.75**	5.98	627	3.08	11.29
-20	-4	**1711**	5837	1471	**2.27**	7.73	755	3.69	17.70
-10	14	**2509**	8560	2157	**2.96**	10.11	846	4.13	26.20
0	32	**3518**	12004	3026	**4.00**	13.65	879	4.28	37.23
3	37	**3866**	13191	3325	**4.42**	15.08	875	4.26	41.11

pc= 45/113 | RGT= 32/89.6 | Tliq= 45/113 | °C/°F

-50	-58	**249**	849	214	**0.72**	2.45	346	1.72	2.76
-40	-40	**540**	1843	464	**1.09**	3.72	495	2.45	6.01
-30	-22	**954**	3253	820	**1.43**	4.89	665	3.27	10.66
-20	-4	**1515**	5168	1303	**1.81**	6.19	835	4.07	17.07
-10	14	**2250**	7677	1935	**2.29**	7.80	984	4.78	25.62
0	32	**3185**	10867	2739	**2.92**	9.96	1091	5.28	36.78
3	37	**3508**	11970	3017	**3.16**	10.77	1111	5.38	40.73

Model
MS18UVULTM

Sales code:
104M0825

Optimal Performance

R1270, 220 V/50 Hz, fan 3m/s
Shows the speed (RPM) that achieves the highest COP at each standard condition.

pe	pc	RGT	Tliq	Cooling capacity			COP	EER	P	RPM	
[°C] [°F]	[°C] [°F]	[°C] [°F]	[°C] [°F]	[W]	[Btu/h]	[kcal/h]	[W/W]	[Btu/Wh]	[W]	[rpm]	
-23.3 -10	54.4 129.9	32.2 90	32.2 90	**1292**	4408	1111	**1.70**	5.78	762	**4000**	**ASHRAE LBP**
-25 -13	55 131	32 89.6	55 131	**965**	3292	830	**1.32**	4.50	732	**4000**	**CECOMAF LBP**
-35 -31	40 104	20 68	40 104	**585**	1997	503	**1.39**	4.76	420	**3000**	**EN12900 LBP**
-23.3 -10	48.8 119.8	4.4 39.9	48.8 119.8	**1068**	3644	918	**1.46**	4.96	734	**4000**	**ARI540 LBP**
-23.3 -10	40.6 105.1	32.2 90	32.2 90	**1140**	3889	980	**2.04**	6.94	560	**3000**	**AHAM LBP**
-35 -31	45 113	32 89.6	45 113	**553**	1887	476	**1.29**	4.39	430	**3000**	**opt LBP**

Cooling Capacity vs. COP

R1270, 220 V/50 Hz, fan 3m/s

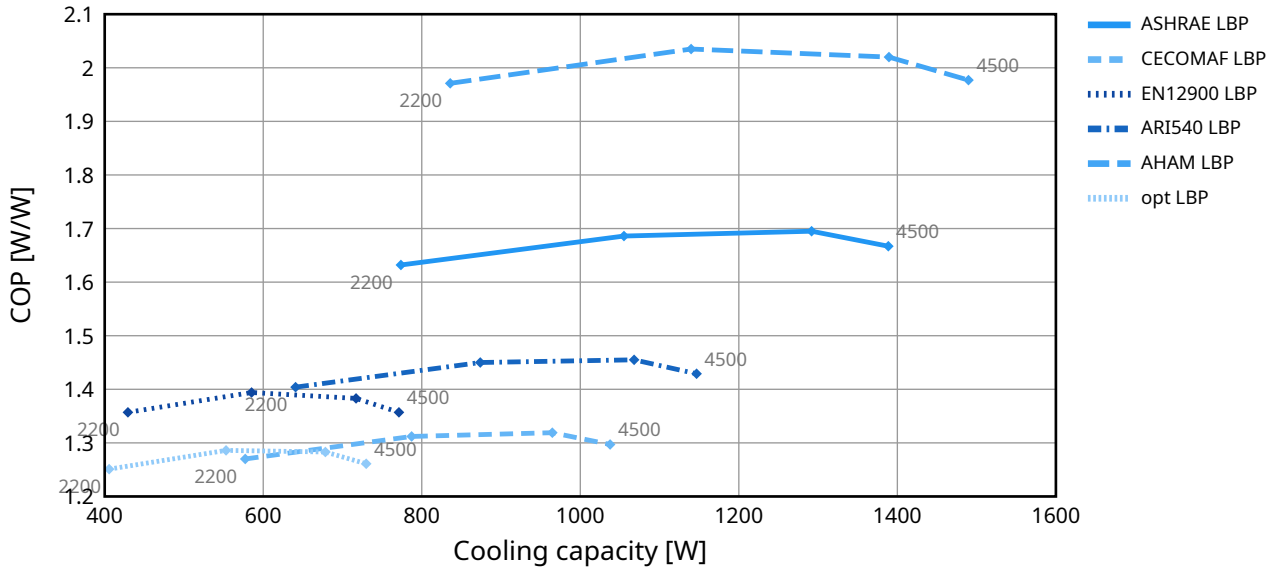

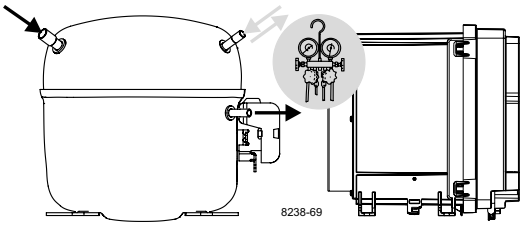

Instructions

SLVE/MS-UV Compressors
100-240 V, 50/60 Hz
105N4932 Controllers

SECOP

Keep electrical equipment clear from oil, chemicals, and water



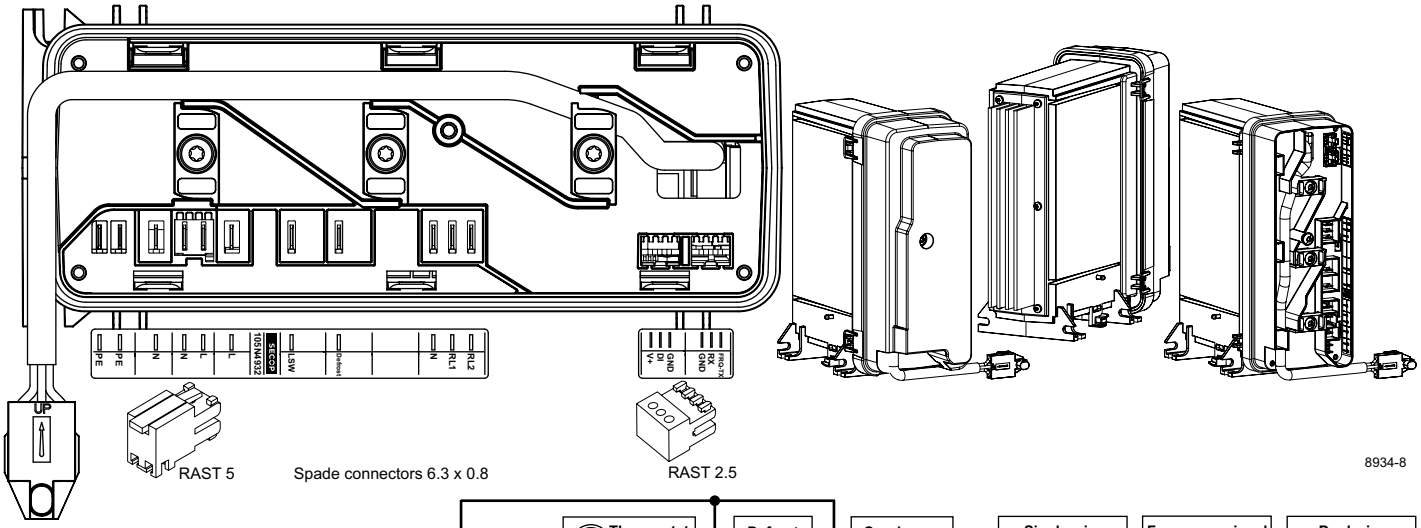

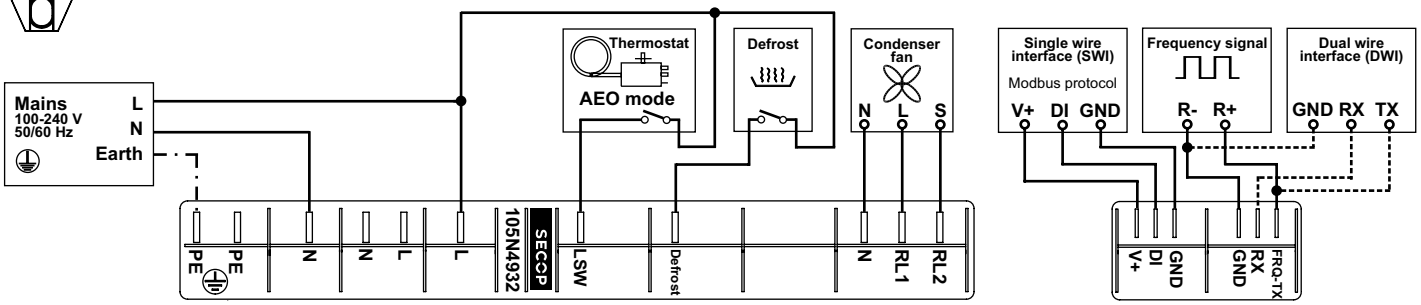

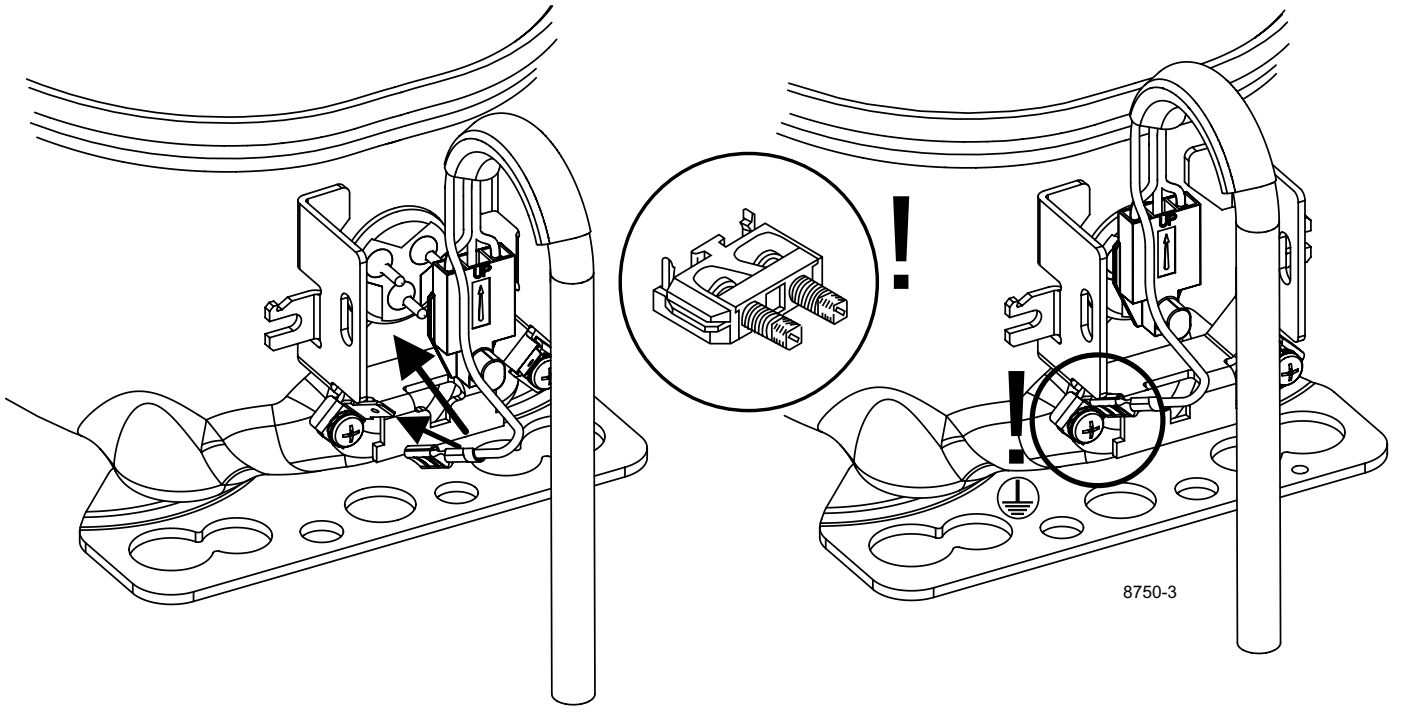

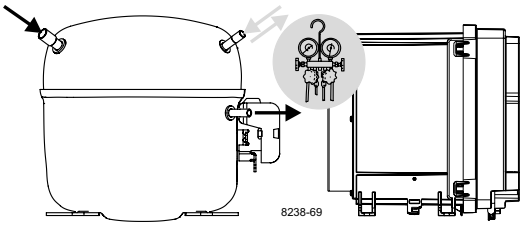

Instructions

SLVE/MS-UV Compressors
100-240 V, 50/60 Hz
105N4932 Controllers

SECOP

Keep electrical equipment clear from oil, chemicals, and water



Service/Repair – R170, R290, R1270

(applies to all flammable refrigerants)



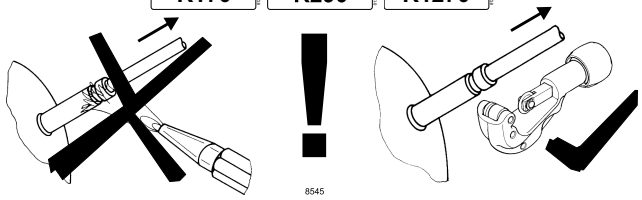

Brazing on Suction Connectors (Direct Intake)

representative image

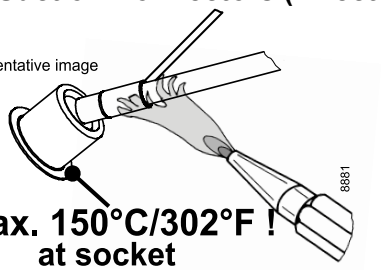

! max. 150°C/302°F ! at socket

brazing solder: phosphor (LP7) or silver

Refer to Product Bulletin: **Brazing on Suction Connectors (Compressors with Direct Suction Intake)**

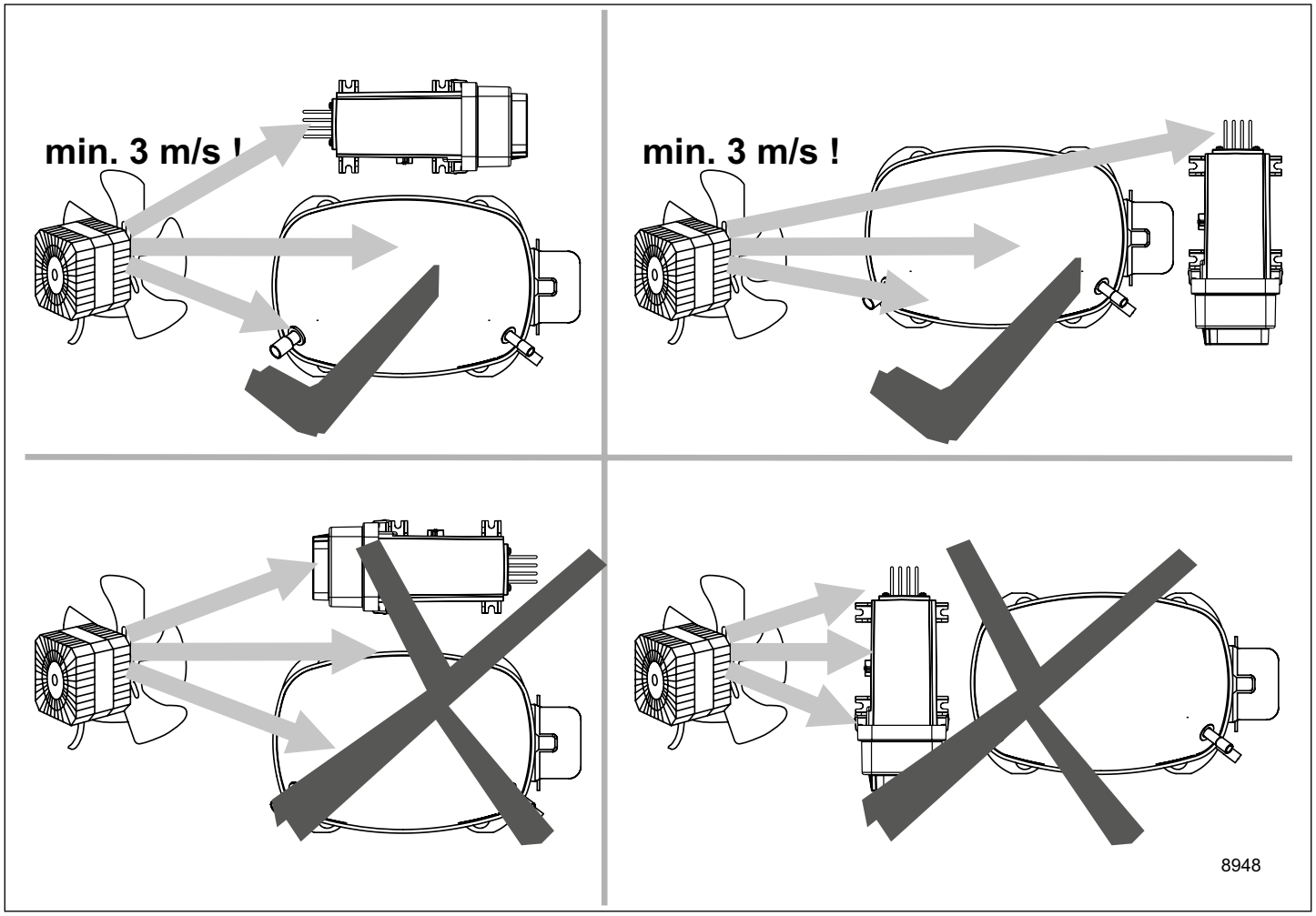

Airflow	3 m/s
Operating conditions	+ 5 °C to 43 °C - humidity < 90 % rH non condensing
Storage conditions	-25 °C to 70 °C - humidity < 90 % rH non condensing
Supply voltage	100-240 V (± 10 %)
Frequency	50/60 Hz
Input power, max.	1000 W

Dismantling, recycling, disposal: At the end of a compressor's lifecycle, proceed by separating and storing components according to their environmental impact. Parts that may cause pollution must be clearly identified and handled separately, ensuring appropriate disposal. Refrigerant gas must not be released into the environment and should be recovered by qualified operators. Compressor oil must also be collected separately. The compressor should be disposed of at specialized disposal centers in accordance with the applicable regulations. **Subject to modifications/alterations. www.secop.com**