Single
Packs

Single Pack SCE18CNLX 208-230V 60Hz CSIR

Single pack code number: **195B4848**

Position	Title	Code	Amount
1	Compressor SCE18CNLX	104H8888	1
2	Starting capacitor (60µF 260V, 6.3mm)	117U5076	1
3	Bolt joint for one compressor | M6 | ø16mm	118-1917	1
Below electrical equipment is pre-assembled on the compressor:			
4	Starting relay (overload protector MRP59EN-6)	117U7413	1
5	Cover	117U1021	1

Secop GmbH • Lise-Meitner-Straße 29 • 24941 Flensburg, Germany • Tel: +49 461 4941 0 • **www.secop.com**

Secop accepts no responsibility for possible errors in catalogs, brochures, and other printed material. Secop reserves the right to alter its products without notice. This also applies to products already on order provided that such alterations can be made without subsequential changes being necessary to specifications already agreed. All trademarks in this material are the property of the respective companies. Secop and the Secop logotype are trademarks of Secop GmbH. All rights reserved.

Model
SCE18CNLX

Sales code:
104H8888

Compressor Data

Refrigerant(s)	**R290**
Refr. charge - tech. limit	**450g / 15.87oz**
Weight	**14.20 kg / 31.31lbs**
Displacement	**17.69 cm3 / 1.08cu.in**
Compressors on pallet	**80**



General – Configurations With SCE18CNLX

–	**Conf. 1**
Motor configuration	CSIR
Power supply (nominal)	208-230 V/60 Hz
Number of phases	1
Voltage range	187-253 V
Approvals	UL, KC, CB
Starting torque	HST
Refrigerant	R290
Application	LBP
Hot gas defrost	OK

Application Notes

- Protector, relay and cover are included and pre-assembled to compressor.
- Provision for PE Grounding is located at the PE Stamp on the compressor

Model
SCE18CNLX

Sales code:
104H8888

Compressor Design

Oil type	**POE**	Winding resistance main	**3.5 Ohm**
Oil viscosity	**32cSt**	Winding resistance aux	**20.7 Ohm**
Oil quantity	**550 / 18.60fl.oz**	Max. winding temp.	**125 °C**
Free gas volume comp.	**1,460 cm3 / 49.37fl.oz**	Max. discharge temp.	**140°C / 284°F**
Motor protection	**external**		

Compressor Dimensions

Housing

A Height	**219mm / 8.62in**
B Height	**213mm / 8.39in**
C Length shell	**218mm / 8.58in**
D Length w. cover	**255mm / 10.04in**
E Width	**151mm / 5.94in**

Find 3D Model here

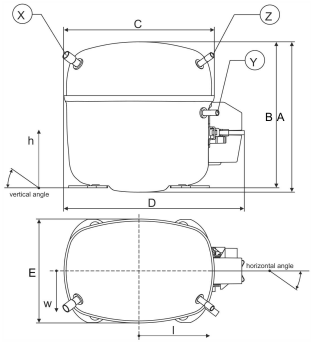

Connectors	Suction X	Discharge Y	Process Z
Diameter [mm]	øi 9.54–9.72 / 0.38–0.38in	øi 6.41–6.59 / 0.25–0.26in	øi 6.41–6.59 / 0.25–0.26in
Material	CU	CU	CU
Horizontal angle ±2°	37°	37°	143°
Vertical angle ±2°	30°	0°	150°
Position l/h/w [mm]	107/193/55 / 4.21/7.60/2.17in	115/110/63 / 4.53/4.33/2.48in	-107/193/55 / -4.21/7.60/2.17in
Straight tube l. [mm]	12 / 0.47in	12 / 0.47in	12 / 0.47in

Mounting Accessories

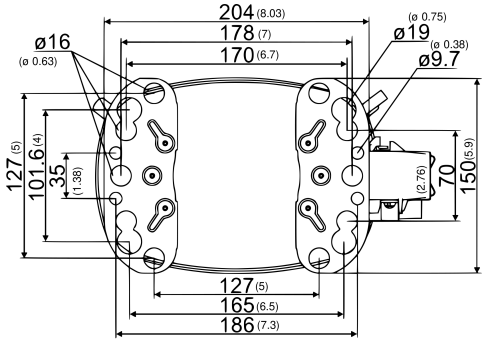

Dimensions in mm [in]

Bolt joint

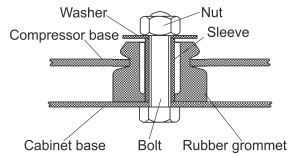

Snap-on

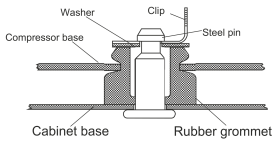

	one comp.	multi pack
Bolt joint | M6 | ø16mm	118-1917	118-1918
Bolt joint | ø1/4" | ø16mm	118-1946	–
Bolt joint | ø1/4" | ø19mm	118-1949	–
Snap-on | ø7,3 | ø16mm	118-1947	118-1919

Model
SCE18CNLX Configuration 1

Sales code:
104H8888

Configuration

Motor configuration	**CSIR**
Power supply (nominal)	**208-230 V/60 Hz 1~**
Refrigerant	**R290**
Application	**LBP**
Voltage range	**187-253 V**
Starting torque	**HST**
Approvals	**UL, KC, CB**
Starting device type	**relay**
Run capacitor	**-/-**
Start capacitor	**60 µF**
LRA (locked rotor amps / 4s/ U(N))	**20.9 A**
RLA (rated load amps / 1s/ U(N))	**3.8 A**
Cut in current (U(N))	**20.9 A**

Ambient/ machine room temperatures minimum /maximum
Ambient temperature range: 10 - 38°C / 50 - 100°F
Machine room temp. compressor: 10 - 43°C / 50 - 109°F

System Cooling
fan 3m/s

Electrical Accessories / Wiring Diagram

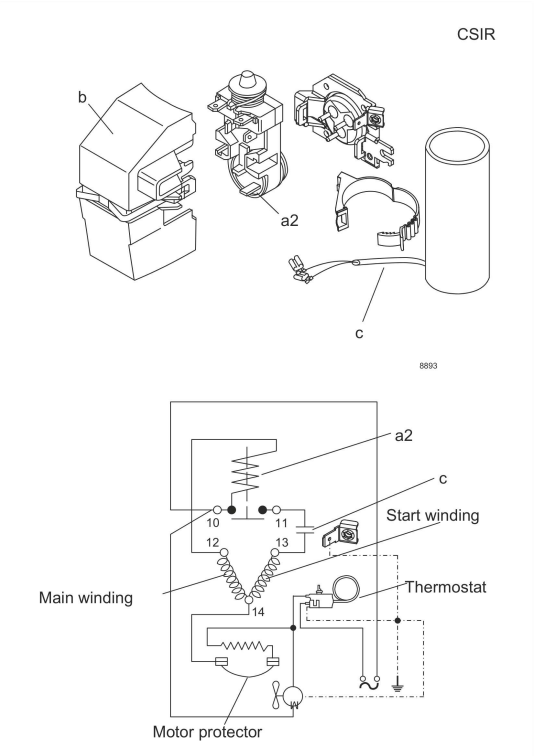

Components (relay + cover: pre-assembled)
a2 assy. relay + ext. protector (T1120) 117U7413
c start capacitor (60µF, 6.3mm, 82kOhm) 117U5076
b plastic cover + clamp 117U1021

Operation Pressure Range

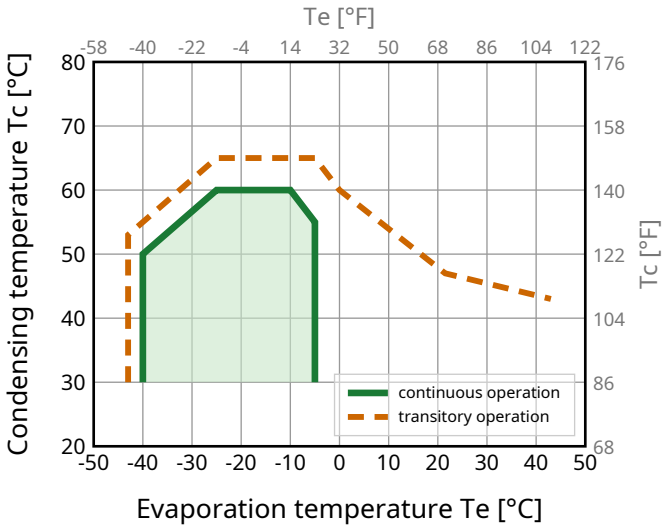

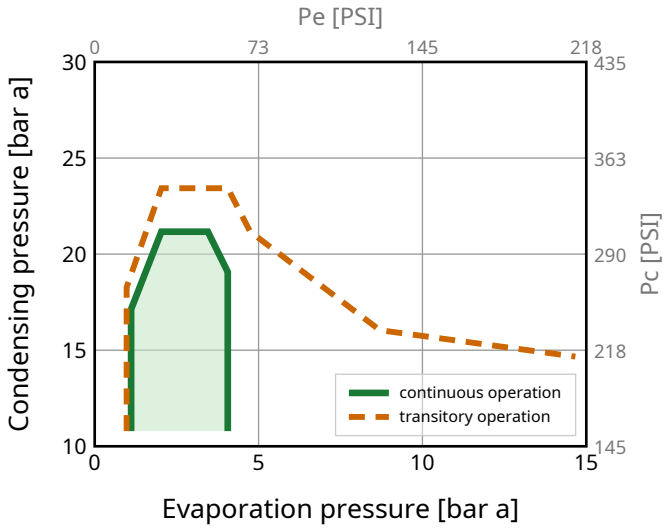

Model
SCE18CNLX Configuration 1

Sales code:
104H8888

Standard Conditions

R290, 230 V/60 Hz, CSIR, fan 3m/s

pe	pc	RGT	Tliq	Cooling capacity			COP	EER	P	I	ṁ	
[°C] [°F]	[°C] [°F]	[°C] [°F]	[°C] [°F]	[W]	[Btu/h]	[kcal/h]	[W/W]	[Btu/Wh]	[W]	[A]	[kg/h]	
-23.3 -10	54.4 129.9	32.2 90	32.2 90	**943**	3218	811	**1.51**	5.15	625	3.46	9.58	**ASHRAE LBP**
-25 -13	55 131	32 89.6	55 131	**694**	2367	597	**1.16**	3.97	596	3.34	8.70	**CECOMAF LBP**
-35 -31	40 104	20 68	40 104	**523**	1784	450	**1.15**	3.93	454	2.85	6.00	**EN12900 LBP**
-23.3 -10	48.8 119.8	4.4 39.9	48.8 119.8	**782**	2666	672	**1.27**	4.35	613	3.39	10.85	**ARI540 LBP**
-23.3 -10	40.6 105.1	32.2 90	32.2 90	**1061**	3620	913	**1.79**	6.10	593	3.29	10.78	**AHAM LBP**
-35 -31	45 113	32 89.6	45 113	**481**	1640	413	**1.07**	3.64	451	2.83	5.42	**opt LBP**

Performance Tables

R290, 230 V/60 Hz, CSIR, fan 3m/s

pc= 45/113 | RGT= 32/89.6 | Tliq= 45/113 | °C/°F

pe		Cooling capacity			COP	EER	P	I	ṁ
[°C]	[°F]	[W]	[Btu/h]	[kcal/h]	[W/W]	[Btu/Wh]	[W]	[A]	[kg/h]
-40	-40	**325**	1109	280	**0.84**	2.88	385	2.65	3.65
-35	-31	**481**	1640	413	**1.07**	3.64	451	2.83	5.42
-30	-22	**654**	2230	562	**1.26**	4.31	518	3.04	7.38
-25	-13	**848**	2893	729	**1.45**	4.95	585	3.27	9.61
-20	-4	**1069**	3646	919	**1.65**	5.61	650	3.52	12.16
-15	5	**1320**	4505	1135	**1.86**	6.33	711	3.77	15.08
-10	14	**1607**	5484	1382	**2.09**	7.14	768	4.00	18.45
-5	23	**1934**	6600	1663	**2.37**	8.07	818	4.22	22.34

pc= 55/131 | RGT= 32/89.6 | Tliq= 55/131 | °C/°F

-40	-40	**203**	692	174	**0.65**	2.21	313	2.35	2.52
-35	-31	**353**	1204	304	**0.87**	2.96	407	2.65	4.40
-30	-22	**515**	1758	443	**1.03**	3.50	502	2.98	6.43
-25	-13	**694**	2367	597	**1.16**	3.97	596	3.34	8.70
-20	-4	**894**	3050	769	**1.30**	4.44	688	3.71	11.25
-15	5	**1120**	3820	963	**1.45**	4.93	775	4.07	14.16
-10	14	**1376**	4694	1183	**1.61**	5.48	857	4.42	17.50
-5	23	**1667**	5688	1434	**1.79**	6.10	932	4.74	21.34

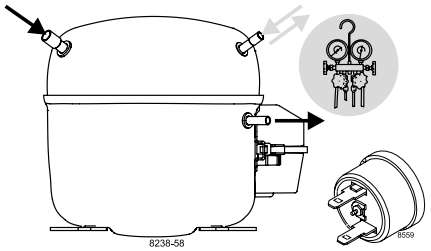

SCE Compressors
(External Protector)

SECOP

Keep electrical equipment clear from <u>oil, chemicals, and water</u>

When operated with a <u>flammable refrigerant,</u> only <u>spark-proof starting equipment</u> is allowed.

CSIR

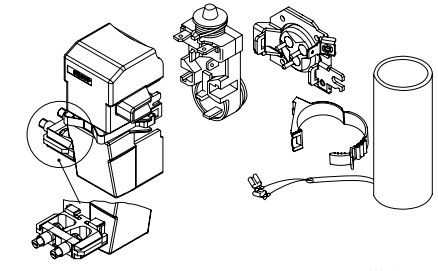

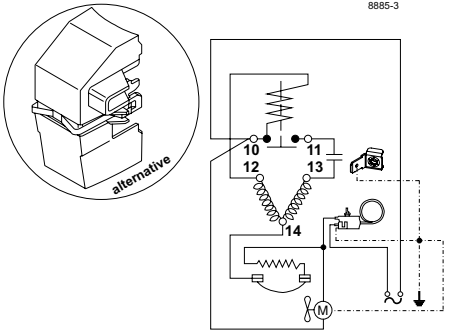

CSCR

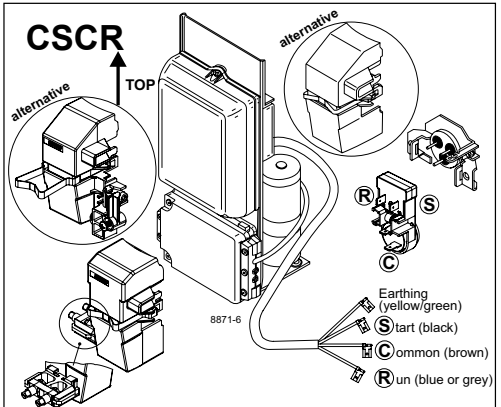

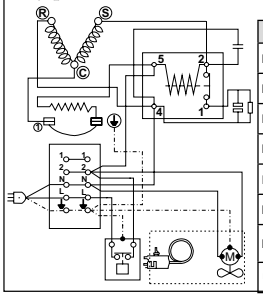

	S	C	R
ENGLISH	Black	Brown	Blue or grey
DEUTSCH	Schwarz	Braun	Blau od. grau
FRANÇAIS	Noir	Marron	Bleu ou gris
ESPAÑOL	Negro	Marrón	Azul o gris
ITALIANO	Nero	Marrone	Blu o grigio
NEDERLANDS	Zwart	Bruin	Blauw of grijs
РУССКИЙ	Чёрный	Корич-невый	Синий или серый
中文	黑色	棕色	蓝色或灰色

CSCR

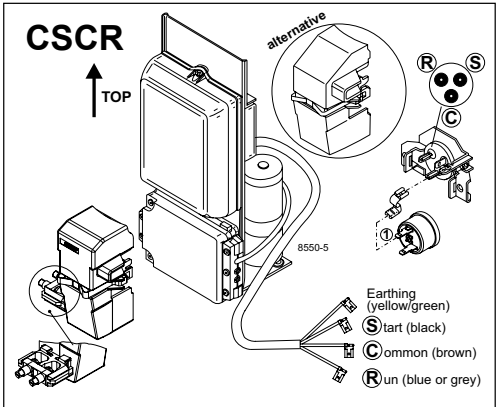

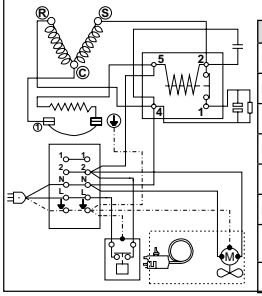

	S	C	R
ENGLISH	Black	Brown	Blue or grey
DEUTSCH	Schwarz	Braun	Blau od. grau
FRANÇAIS	Noir	Marron	Bleu ou gris
ESPAÑOL	Negro	Marrón	Azul o gris
ITALIANO	Nero	Marrone	Blu o grigio
NEDERLANDS	Zwart	Bruin	Blauw of grijs
РУССКИЙ	Чёрный	Корич-невый	Синий или серый
中文	黑色	棕色	蓝色或灰色

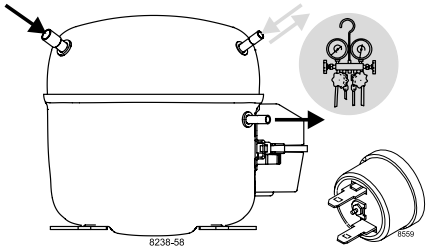

SCE Compressors
(External Protector)

SECOP

Keep electrical equipment clear from oil, chemicals, and water

When operated with a flammable refrigerant, only spark-proof starting equipment is allowed.

Service/Repair – R290, R600a, R170, R1270, R1234yf
(applies to all flammable refrigerants)

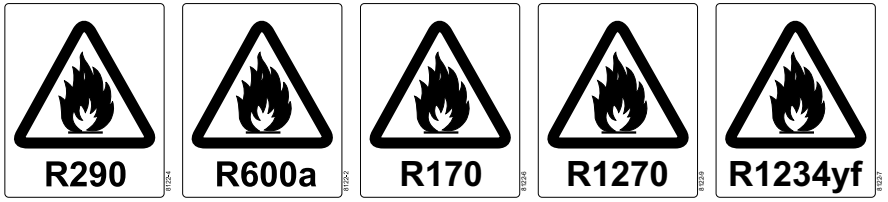

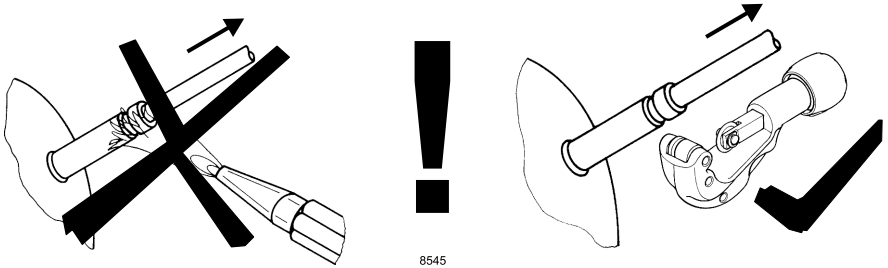

Brazing on Suction Connectors (Direct Intake)

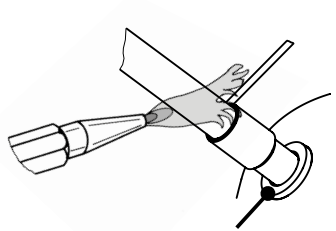

! max. 350°C/662°F !
at socket

brazing solder: phosphor (LP7) or silver

Refer to Product Bulletin:
Brazing on Suction Connectors
(SCE Compressors with Direct Suction Intake)

Dismantling, recycling, disposal: At the end of a compressor's lifecycle, proceed by separating and storing components according to their environmental impact. Parts that may cause pollution must be clearly identified and handled separately, ensuring appropriate disposal. Refrigerant gas must not be released into the environment and should be recovered by qualified operators. Compressor oil must also be collected separately. The compressor should be disposed of at specialized disposal centers in accordance with the applicable regulations. **Subject to modifications/alterations. www.secop.com**