Single
Packs

Single Pack NLV8.0CN 100-240V 50/60Hz PM

Single pack code number: **195B4849**

Position	Title	Code	Amount
1	Compressor NLV8.0CN	105H7865	1
2	Electronic unit NLV	105N4866	1
3	Cover	103N2008	1
4	Bolt joint for one compressor | M6 | ø16mm	118-1917	1

Secop GmbH • Lise-Meitner-Straße 29 • 24941 Flensburg, Germany • Tel: +49 461 4941 0 • **www.secop.com**

Secop accepts no responsibility for possible errors in catalogs, brochures, and other printed material. Secop reserves the right to alter its products without notice. This also applies to products already on order provided that such alterations can be made without subsequential changes being necessary to specifications already agreed. All trademarks in this material are the property of the respective companies. Secop and the Secop logotype are trademarks of Secop GmbH. All rights reserved.

Model
NLV8.0CN

Sales code:
105H7865

Compressor Data

Refrigerant(s)	**R290**
Refr. charge - tech. limit	**300g / 10.58oz**
Weight	**10.80 kg / 23.81lbs**
Displacement	**7.96 cm3 / 0.49cu.in**
Compressors on pallet	**80**



General – Configurations With NLV8.0CN and Controller

–	**Conf. 1**	**Conf. 2**	**Conf. 3**	**Conf. 4**
Sales code single pack:	105N4866	105N4910	105N4960	105N4962
Power supply (nominal)	100-240 V,50/60 Hz	220-240 V,50/60 Hz	100-240 V,50/60 Hz	100-240 V,50/60 Hz
Number of phases	1~AC	1~AC	1~AC	1~AC
Approvals	VDE, UL, CCC, CB	VDE, CCC	VDE, UL, CCC, CB	VDE, UL, CCC, CB
Starting torque	HST	HST	HST	HST
Refrigerant	R290	R290	R290	R290
Application	L+MBP	L+MBP	L+MBP	L+MBP
Hot gas defrost	OK	OK	OK	OK
Long interval pull down	OK	OK	OK	OK
Protection	Mechanic	Mechanic	Mechanic	Mechanic

Application Notes

- Provision for PE Grounding is located at the PE Stamp on the compressor
- Direct suction intake with telescope

Model
NLV8.0CN

Sales code:
105H7865

Compressor Design

Oil type	**POE**	Motor protection	**internal**
Oil viscosity	**32cSt**	Max. winding temp.	**125 °C**
Oil quantity	**300 / 10.14fl.oz**	Max. discharge temp.	**130°C / 266°F**
Free gas volume comp.	**2,360 cm3 / 79.80fl.oz**		

Compressor Dimensions

Housing

A Height	**203mm / 7.99in**
B Height	**197mm / 7.76in**
C Length shell	**205mm / 8.07in**
D Length w. cover	**252mm / 9.92in**
E Width	**166mm / 6.54in**

Find 3D Model here

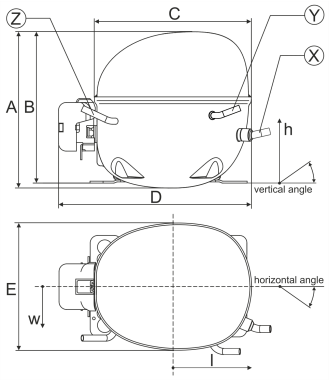

Connectors	Suction X	Discharge Y	Process Z
Diameter [mm]	øi 8.11–8.29 / 0.32–0.33in	øi 6.11–6.29 / 0.24–0.25in	øi 6.11–6.29 / 0.24–0.25in
Material	CU	CU	CU
Horizontal angle ±2°	0°	0°	0°
Vertical angle ±2°	15°	21°	155°
Position l/h/w [mm]	132/68.5/56.7 / 5.20/2.70/2.23in	94/101.7/81 / 3.70/4.00/3.19in	-109.3/94.3/72 / -4.30/3.71/2.83in
Straight tube l. [mm]	12 / 0.47in	12 / 0.47in	12 / 0.47in

Mounting Accessories

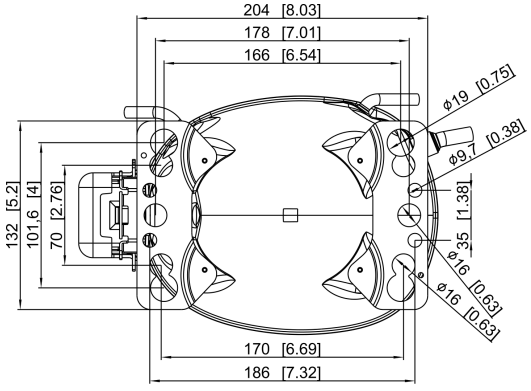

Dimensions in mm [in]

Bolt joint

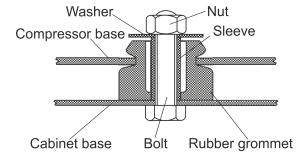

Snap-on

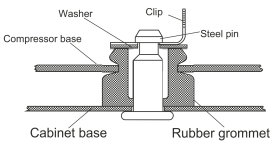

	one comp.	multi pack
Bolt joint | M6 | ø16mm	118-1917	118-1918
Bolt joint | ø1/4" | ø16mm	118-1946	–
Bolt joint | ø1/4" | ø19mm	118-1949	–
Snap-on | ø7,3 | ø16mm	118-1947	118-1919

Model
NLV8.0CN System Design

Sales code:
105H7865

System Design

Operation Pressure Range R290

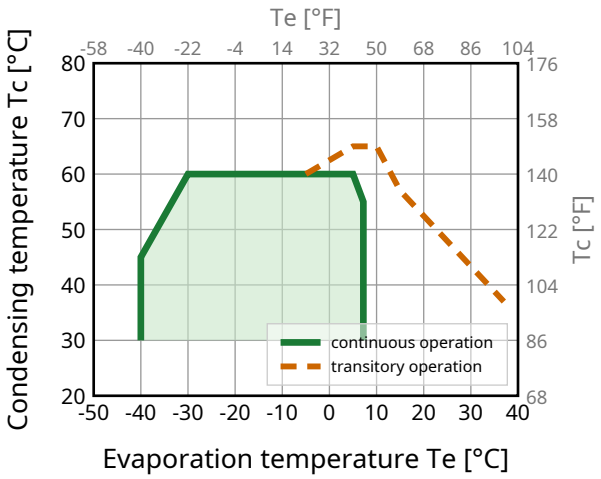

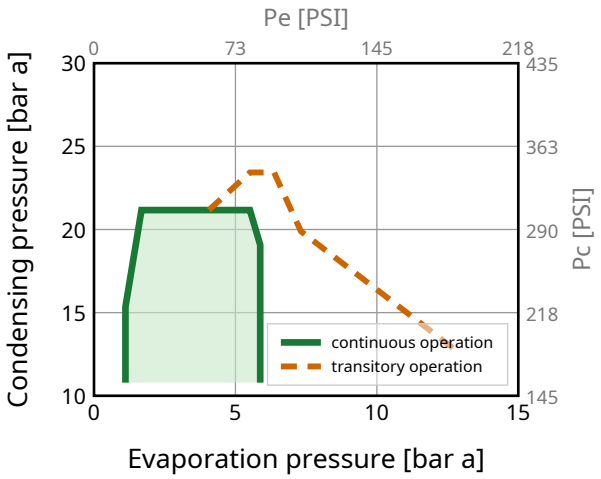

System Cooling

Compressor and Controller Cooling: fan 3m/s

Ensure proper airflow of 3 m/s at both compressor and electronic units.

The airflow for the electronics must be directed to the heat sink.

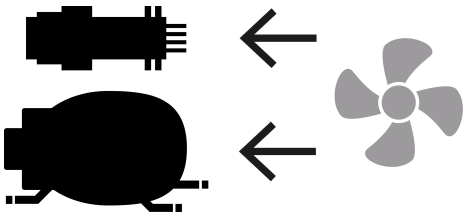

Accessories (Compressor + Controller)

103N2008	plastic cover	1 pcs

Model

NLV8.0CN

Controller Overview

Sales code:

105H7865

Controller Overview

–	**Conf. 1**	**Conf. 2**	**Conf. 3**	**Conf. 4**
Sales code single pack:	105N4866	105N4910	105N4960	105N4962
Sales code industry pack:	105N4867 (8)	105N4911 (8)	105N4961 (8)	105N4963 (8)
Voltage nom.:	100-240 V,50/60 Hz	220-240 V,50/60 Hz	100-240 V,50/60 Hz	100-240 V,50/60 Hz
Voltage range	90-150/180-270 V	180-270 V	90-150/180-270 V	90-150/180-270 V
Max output power	1000 W	1000 W	1000 W	1000 W
Compressor speed range:	2000-4500 rpm	2000-4500 rpm	2000-4500 rpm	2000-4500 rpm
Cable length:	680 mm	680 mm	680 mm	915 mm
Protection class:	IP43	IP54	IP54	IP54
LRA (Locked Rotor Amperage):	1,2 A	1,2 A	1,2 A	1,2 A
AEO and Defrost pin	–	Yes	Yes	Yes
Frequency input	–	Yes	Yes	Yes
Modbus input	RS485	SWI	SWI	SWI
Controller Wiring	» Controller Wiring	» Controller Wiring	» Controller Wiring	» Controller Wiring

Controller Dimensions

Conf. 1

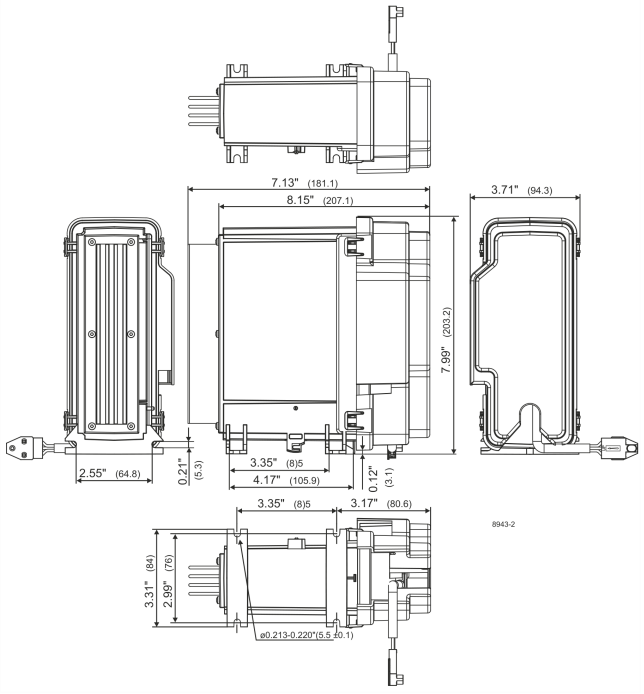

Conf. 2, 3, 4

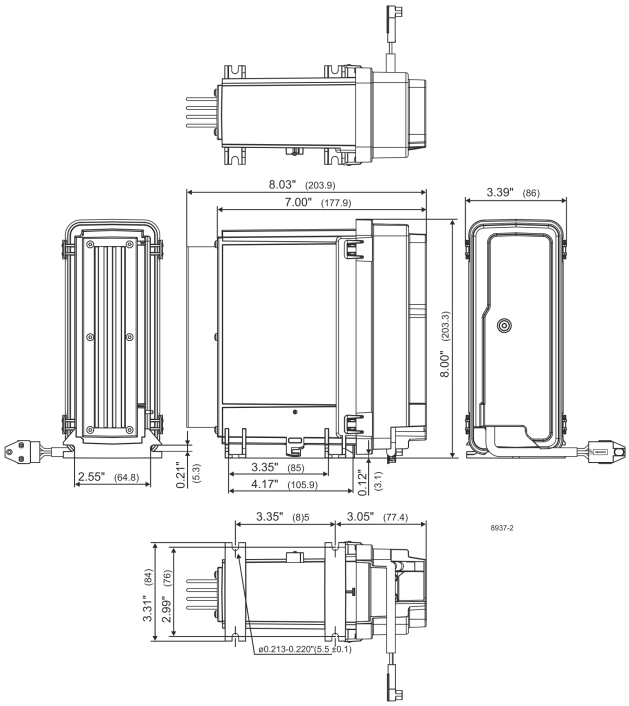

Operating Instructions

For proper installation and operation of variable-speed compressors and controllers, please refer to the Operating Instructions. The document covers electrical installation, speed control, and technical data for the controller.

» Download Operating Instructions

Model
NLV8.0CN

Sales code:
105H7865

Standard Conditions — 2000 rpm

R290, 240 V/50 Hz, fan 3m/s

pe	pc	RGT	Tliq	Cooling capacity			COP	EER	P	I	ṁ	
[°C] [°F]	[°C] [°F]	[°C] [°F]	[°C] [°F]	[W]	[Btu/h]	[kcal/h]	[W/W]	[Btu/Wh]	[W]	[A]	[kg/h]	
-23.3 -10	54.4 129.9	32.2 90	32.2 90	**260**	887	224	**1.77**	6.04	147	0.71	2.64	**ASHRAE LBP**
-25 -13	55 131	32 89.6	55 131	**192**	654	165	**1.36**	4.64	141	0.69	2.40	**CECOMAF LBP**
-35 -31	40 104	20 68	40 104	**140**	478	120	**1.42**	4.85	99	0.58	1.61	**EN12900 LBP**
-6.7 20	54.4 129.9	35 95	46.1 115	**482**	1644	414	**2.36**	8.04	204	0.91	5.52	**ASHRAE MBP**
-10 14	55 131	32 89.6	55 131	**382**	1303	328	**1.95**	6.67	196	0.88	4.86	**CECOMAF MBP**
-10 14	45 113	20 68	45 113	**421**	1435	362	**2.41**	8.22	175	0.81	5.18	**EN12900 MBP**

Performance Tables — 2000 rpm

R290, 240 V/50 Hz, fan 3m/s

pc= 45/113 | RGT= 32/89.6 | Tliq= 45/113 | °C/°F

pe		Cooling capacity			COP	EER	P	I	ṁ
[°C]	[°F]	[W]	[Btu/h]	[kcal/h]	[W/W]	[Btu/Wh]	[W]	[A]	[kg/h]
-40	-40	**92**	315	79	**1.07**	3.65	86	0.56	1.04
-30	-22	**176**	599	151	**1.51**	5.14	117	0.62	1.99
-20	-4	**289**	986	249	**1.95**	6.66	148	0.72	3.29
-10	14	**437**	1492	376	**2.50**	8.54	175	0.81	5.02
0	32	**626**	2136	538	**3.27**	11.15	192	0.87	7.28
10	50	**860**	2935	740	**4.46**	15.20	193	0.87	10.17

pc= 55/131 | RGT= 32/89.6 | Tliq= 55/131 | °C/°F

-40	-40	**68**	232	58	**0.77**	2.63	88	0.56	0.84
-30	-22	**144**	491	124	**1.18**	4.02	122	0.64	1.80
-20	-4	**247**	842	212	**1.54**	5.27	160	0.76	3.11
-10	14	**382**	1303	328	**1.95**	6.67	196	0.88	4.86
0	32	**554**	1892	477	**2.48**	8.45	224	0.99	7.15
10	50	**770**	2626	662	**3.21**	10.96	240	1.06	10.11

Model
NLV8.0CN

Sales code:
105H7865

Standard Conditions — 4500 rpm

R290, 240 V/50 Hz, fan 3m/s

pe	pc	RGT	Tliq	Cooling capacity			COP	EER	P	I	ṁ	
[°C] [°F]	[°C] [°F]	[°C] [°F]	[°C] [°F]	[W]	[Btu/h]	[kcal/h]	[W/W]	[Btu/Wh]	[W]	[A]	[kg/h]	
-23.3 -10	54.4 129.9	32.2 90	32.2 90	**622**	2124	535	**1.83**	6.23	341	1.49	6.32	**ASHRAE LBP**
-25 -13	55 131	32 89.6	55 131	**462**	1578	398	**1.41**	4.81	328	1.43	5.80	**CECOMAF LBP**
-35 -31	40 104	20 68	40 104	**340**	1160	292	**1.48**	5.06	229	1.04	3.90	**EN12900 LBP**
-6.7 20	54.4 129.9	35 95	46.1 115	**1098**	3746	944	**2.34**	7.97	470	2.02	12.57	**ASHRAE MBP**
-10 14	55 131	32 89.6	55 131	**878**	2994	755	**1.95**	6.66	449	1.93	11.16	**CECOMAF MBP**
-10 14	45 113	20 68	45 113	**953**	3251	819	**2.38**	8.10	401	1.73	11.73	**EN12900 MBP**

Performance Tables — 4500 rpm

R290, 240 V/50 Hz, fan 3m/s

pc= 45/113 | RGT= 32/89.6 | Tliq= 45/113 | °C/°F

pe		Cooling capacity			COP	EER	P	I	ṁ
[°C]	[°F]	[W]	[Btu/h]	[kcal/h]	[W/W]	[Btu/Wh]	[W]	[A]	[kg/h]
-40	-40	**230**	785	198	**1.14**	3.89	202	0.93	2.59
-30	-22	**423**	1443	364	**1.56**	5.32	271	1.21	4.78
-20	-4	**671**	2289	577	**1.97**	6.72	341	1.49	7.63
-10	14	**990**	3380	852	**2.47**	8.42	401	1.73	11.37
0	32	**1398**	4770	1202	**3.16**	10.79	442	1.90	16.25
10	50	**1909**	6515	1642	**4.20**	14.34	454	1.95	22.58

pc= 55/131 | RGT= 32/89.6 | Tliq= 55/131 | °C/°F

-40	-40	**169**	575	145	**0.81**	2.76	208	0.96	2.10
-30	-22	**354**	1207	304	**1.24**	4.22	286	1.27	4.42
-20	-4	**585**	1995	503	**1.58**	5.39	370	1.60	7.36
-10	14	**878**	2994	755	**1.95**	6.66	449	1.93	11.16
0	32	**1249**	4261	1074	**2.43**	8.28	515	2.21	16.10
10	50	**1715**	5851	1475	**3.08**	10.52	556	2.38	22.53

Model
NLV8.0CN

Sales code:
105H7865

Optimal Performance

R290, 240 V/50 Hz, fan 3m/s
Shows the speed (RPM) that achieves the highest COP at each standard condition.

pe	pc	RGT	Tliq	Cooling capacity			COP	EER	P	RPM	
[°C] [°F]	[°C] [°F]	[°C] [°F]	[°C] [°F]	[W]	[Btu/h]	[kcal/h]	[W/W]	[Btu/Wh]	[W]	[rpm]	
-23.3 -10	54.4 129.9	32.2 90	32.2 90	**410**	1400	353	**1.86**	6.36	220	**3000**	**ASHRAE LBP**
-25 -13	55 131	32 89.6	55 131	**305**	1040	262	**1.44**	4.91	212	**3000**	**CECOMAF LBP**
-35 -31	40 104	20 68	40 104	**224**	765	193	**1.51**	5.17	148	**3000**	**EN12900 LBP**
-6.7 20	54.4 129.9	35 95	46.1 115	**724**	2470	623	**2.39**	8.16	303	**3000**	**ASHRAE MBP**
-10 14	55 131	32 89.6	55 131	**579**	1974	498	**2.00**	6.82	290	**3000**	**CECOMAF MBP**
-10 14	45 113	20 68	45 113	**628**	2143	540	**2.43**	8.29	259	**3000**	**EN12900 MBP**

Cooling Capacity vs. COP

R290, 240 V/50 Hz, fan 3m/s

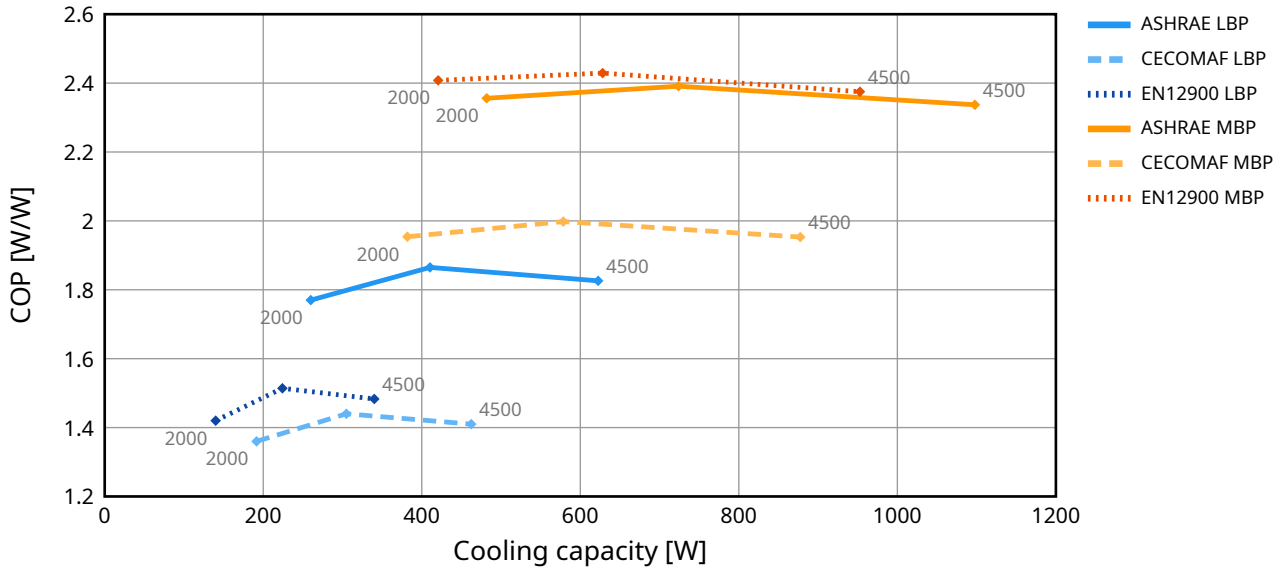

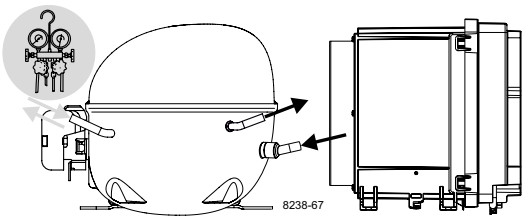

Instructions

NLV/MN-UV Compressors
100-240 V, 50/60 Hz
105N4960/105N4964
Controllers

SECOP

Keep electrical equipment clear from oil, chemicals, and water



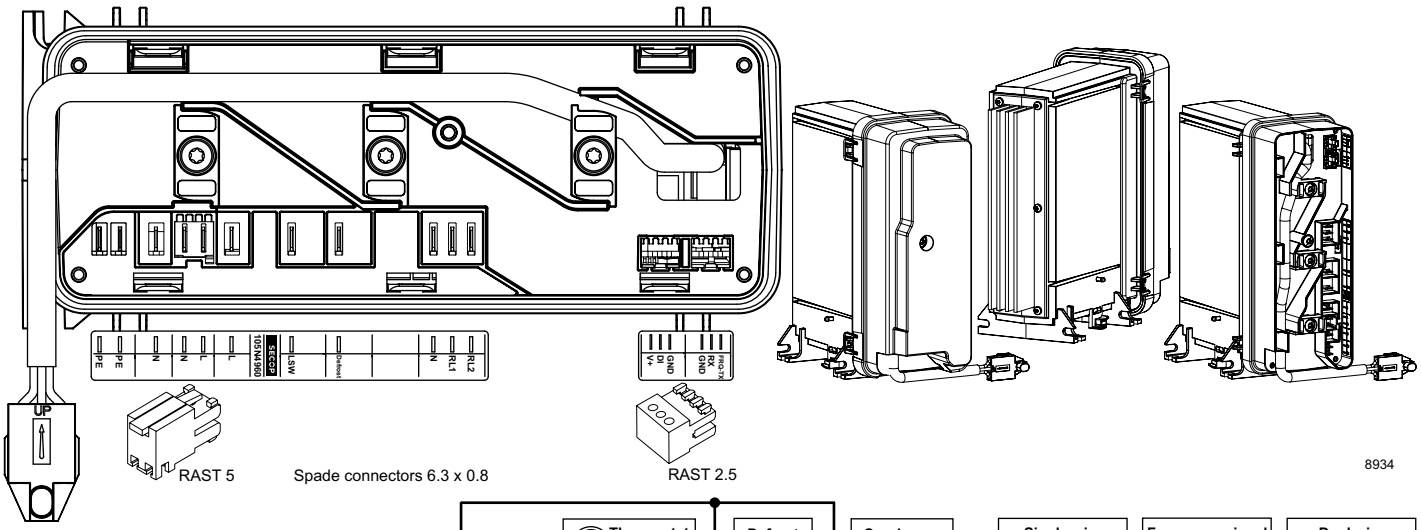

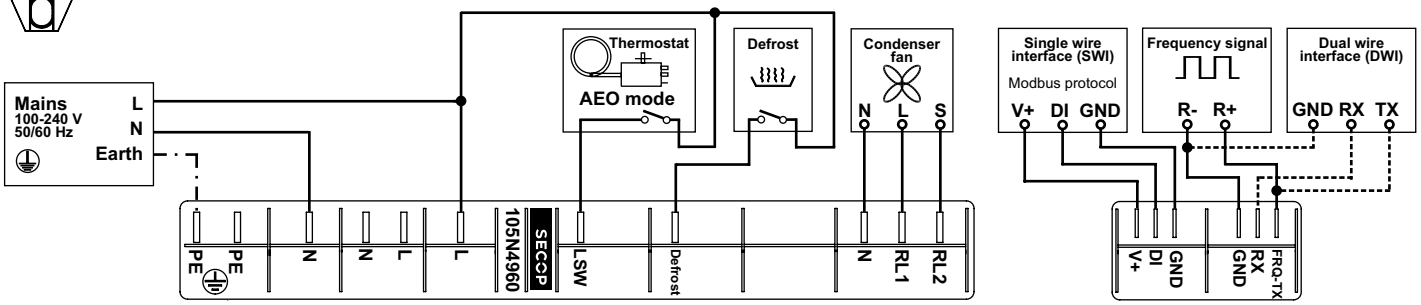

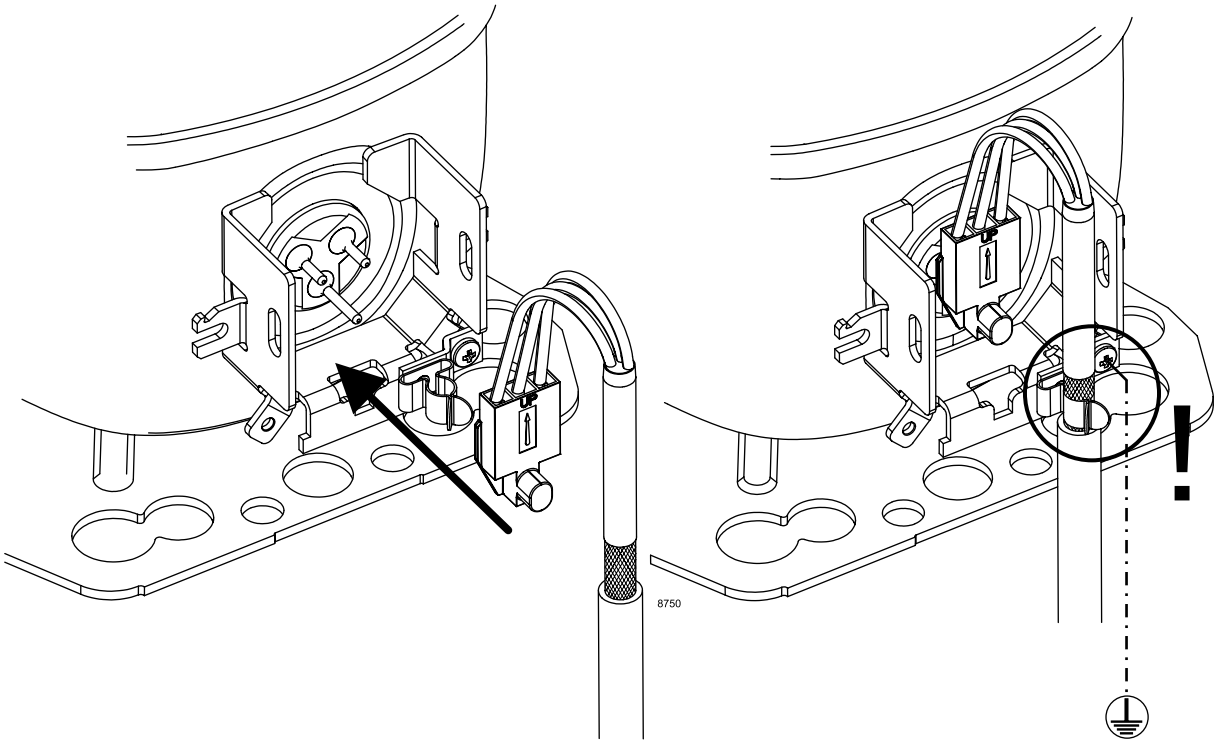

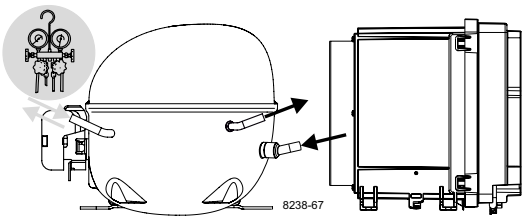

Instructions

NLV/MN-UV Compressors
100-240 V, 50/60 Hz
105N4960/105N4964
Controllers

SECOP

Keep electrical equipment clear from oil, chemicals, and water



Service/Repair – R170, R290, R1270

(applies to all flammable refrigerants)



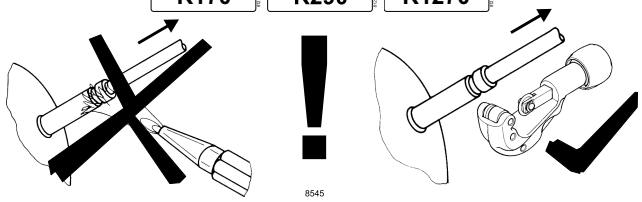

Brazing on Suction Connectors (Direct Intake)

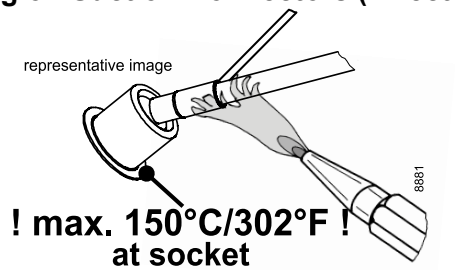

! max. 150°C/302°F ! at socket

brazing solder: phosphor (LP7) or silver

Refer to Product Bulletin: **Brazing on Suction Connectors (Compressors with Direct Suction Intake)**

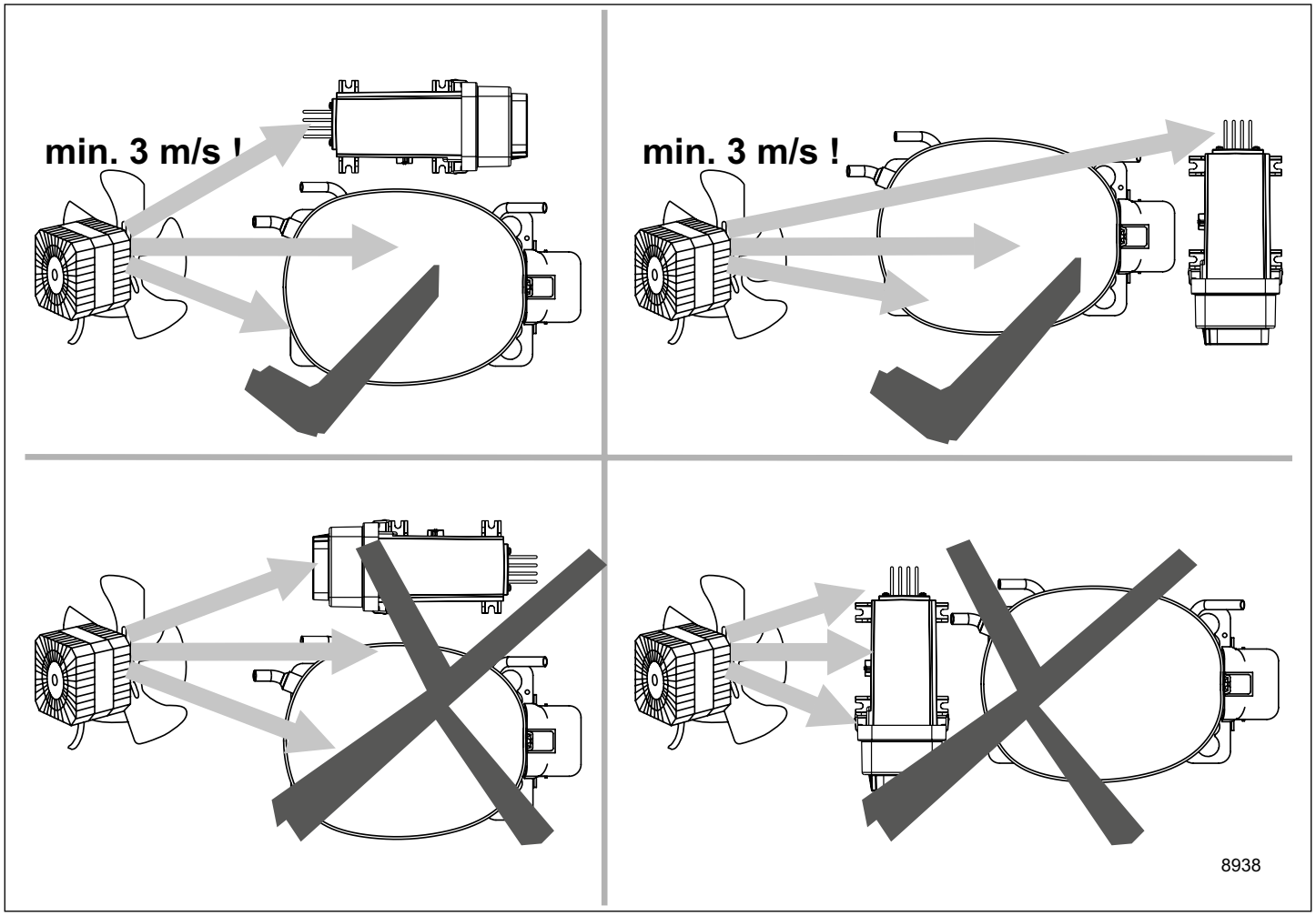

Airflow	3 m/s
Operating conditions	+ 5 °C to 43 °C - humidity < 90 % rH non condensing
Storage conditions	-25 °C to 70 °C - humidity < 90 % rH non condensing
Supply voltage	100-240 V (± 10 %)
Frequency	50/60 Hz
Input power, max.	1000 W

Dismantling, recycling, disposal: At the end of a compressor's lifecycle, proceed by separating and storing components according to their environmental impact. Parts that may cause pollution must be clearly identified and handled separately, ensuring appropriate disposal. Refrigerant gas must not be released into the environment and should be recovered by qualified operators. Compressor oil must also be collected separately. The compressor should be disposed of at specialized disposal centers in accordance with the applicable regulations. **Subject to modifications/alterations. www.secop.com**

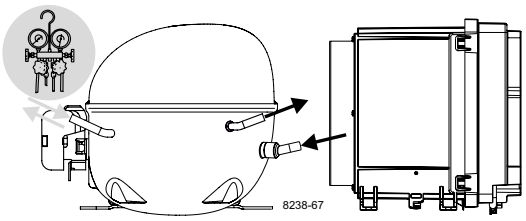

Instructions

NLV/MN-UV Compressors
100-240 V, 50/60 Hz
105N4962/105N4966/
105N4972 Controllers

SECOP

Keep electrical equipment clear from oil, chemicals, and water



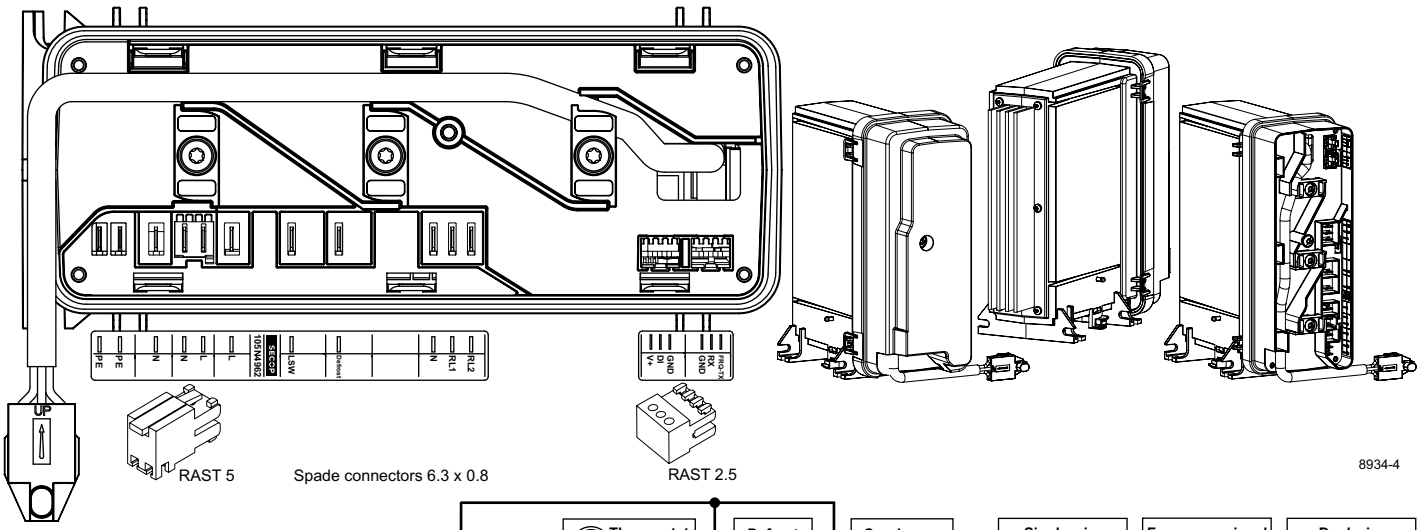

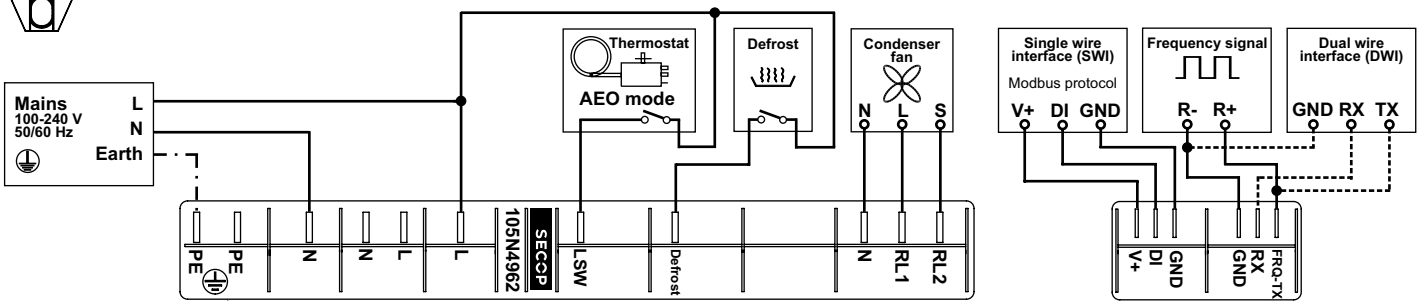

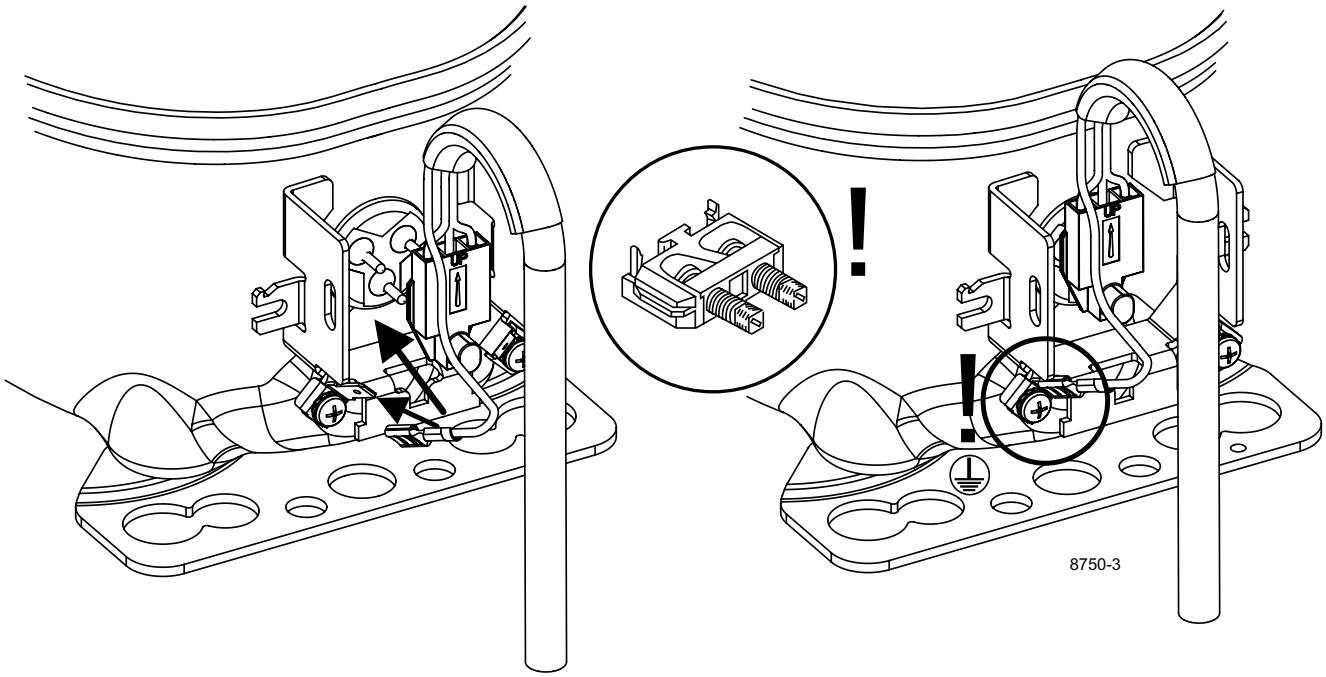

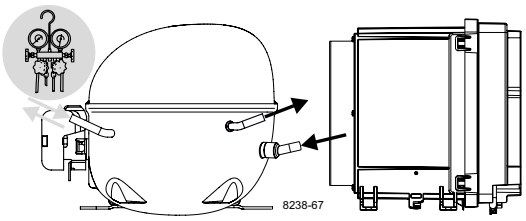

Instructions

NLV/MN-UV Compressors
100-240 V, 50/60 Hz
105N4962/105N4966/
105N4972 Controllers

SECOP

Keep electrical equipment clear from oil, chemicals, and water



Service/Repair – R170, R290, R1270

(applies to all flammable refrigerants)



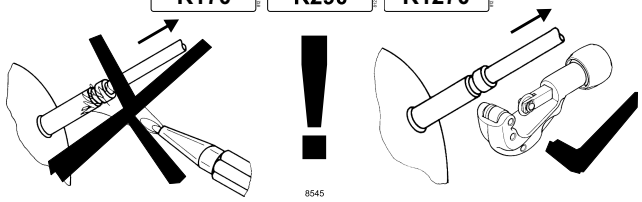

Brazing on Suction Connectors (Direct Intake)

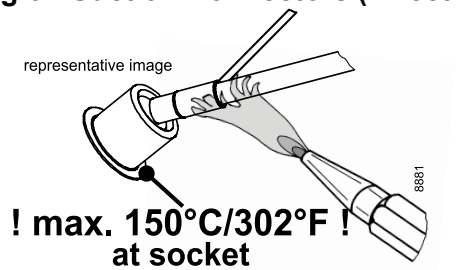

! max. 150°C/302°F ! at socket

brazing solder: phosphor (LP7) or silver

Refer to Product Bulletin: **Brazing on Suction Connectors (Compressors with Direct Suction Intake)**

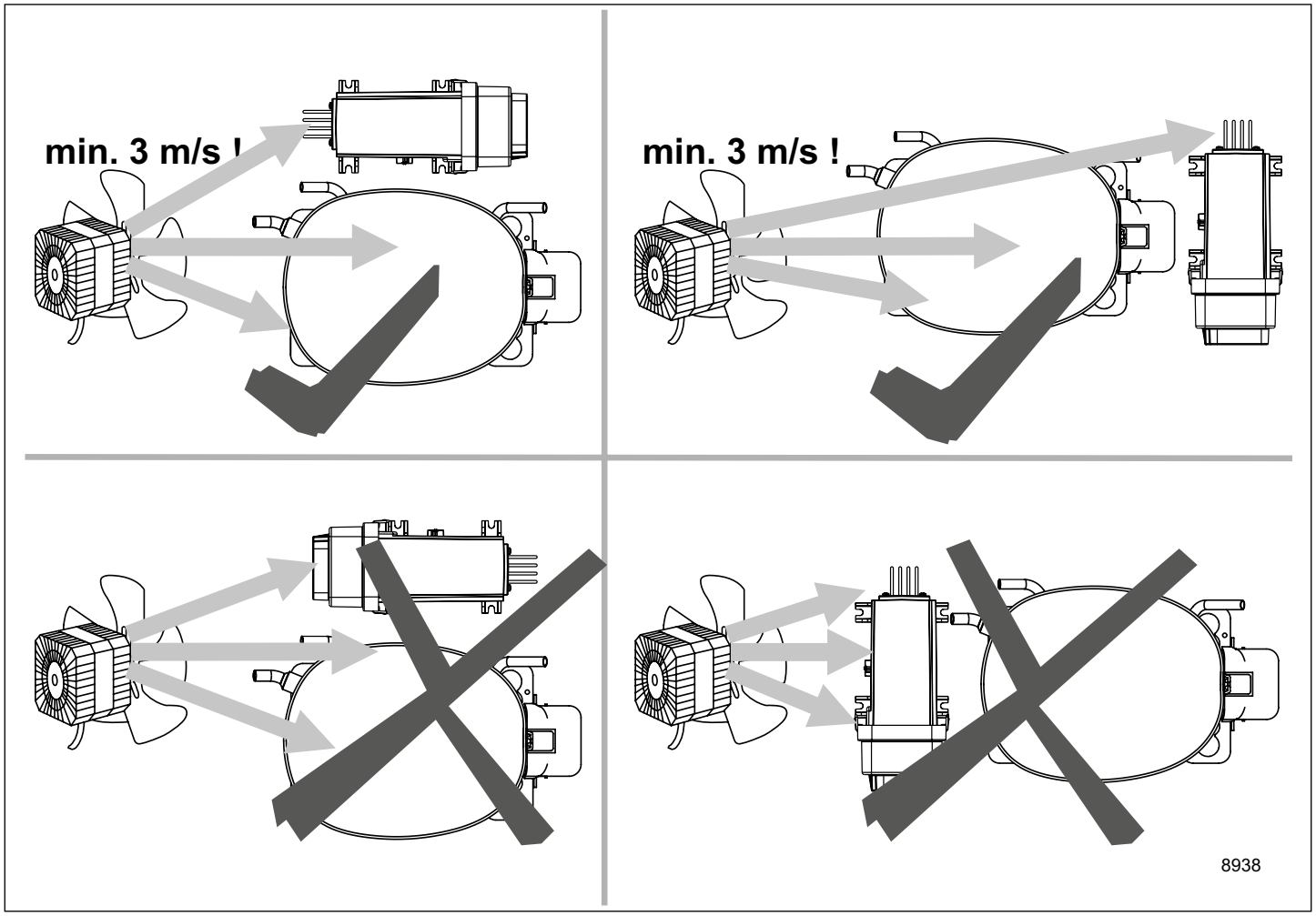

Airflow	3 m/s
Operating conditions	+ 5 °C to 43 °C - humidity < 90 % rH non condensing
Storage conditions	-25 °C to 70 °C - humidity < 90 % rH non condensing
Supply voltage	100-240 V (± 10 %)
Frequency	50/60 Hz
Input power, max.	1000 W

Dismantling, recycling, disposal: At the end of a compressor's lifecycle, proceed by separating and storing components according to their environmental impact. Parts that may cause pollution must be clearly identified and handled separately, ensuring appropriate disposal. Refrigerant gas must not be released into the environment and should be recovered by qualified operators. Compressor oil must also be collected separately. The compressor should be disposed of at specialized disposal centers in accordance with the applicable regulations. **Subject to modifications/alterations. www.secop.com**

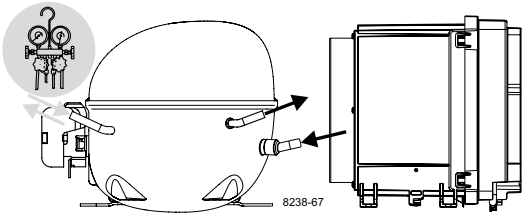

Instructions

NLV/MN-UV Compressors
220-240 V, 50/60 Hz
105N491x Series
Controllers

SECOP

Keep electrical equipment clear from oil, chemicals, and water



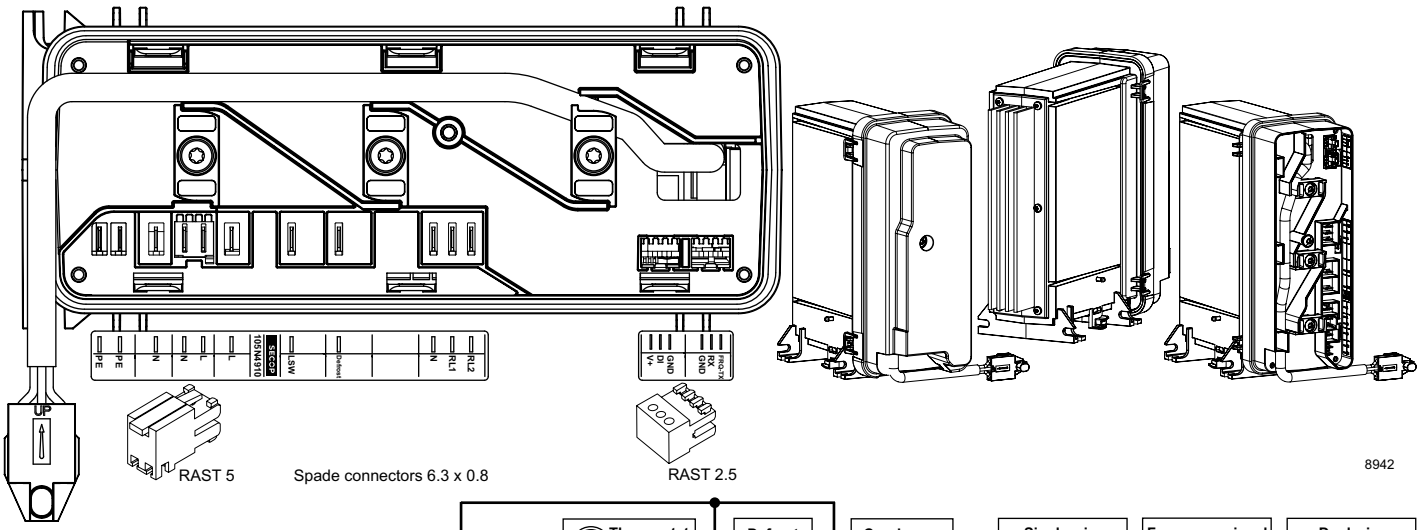

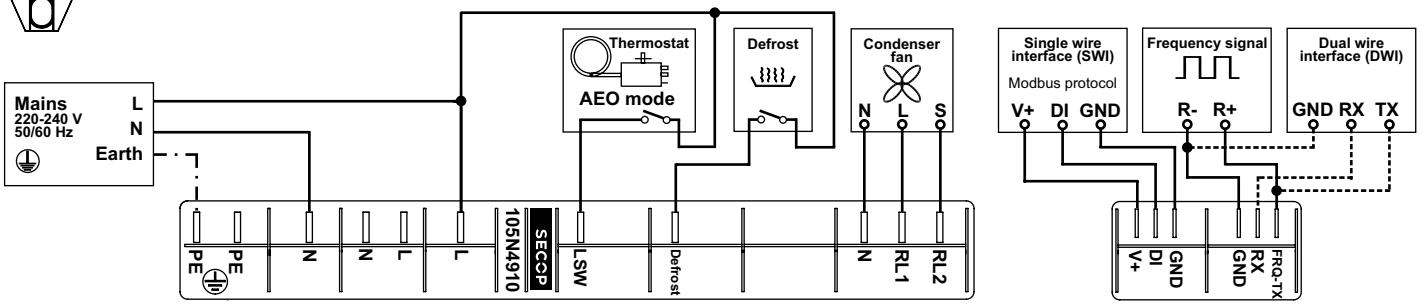

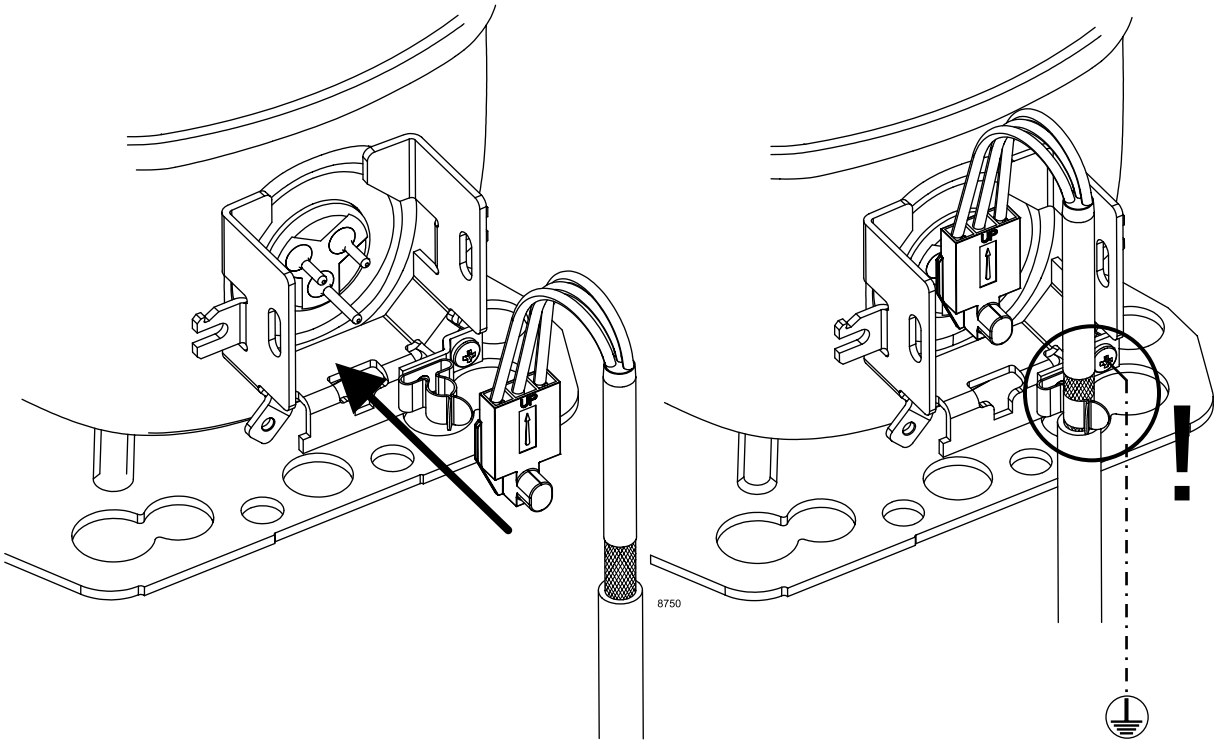

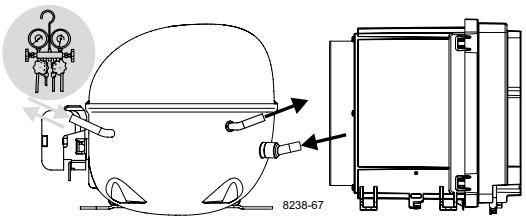

Instructions

NLV/MN-UV Compressors
220-240 V, 50/60 Hz
105N491x Series
Controllers

SECOP

Keep electrical equipment clear from oil, chemicals, and water



Service/Repair – R170, R290, R1270

(applies to all flammable refrigerants)



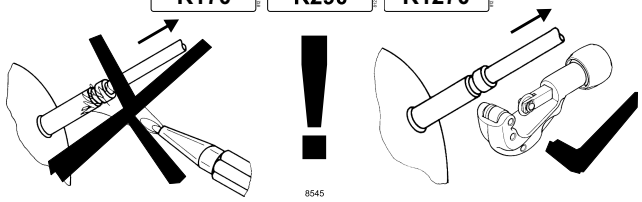

Brazing on Suction Connectors (Direct Intake)

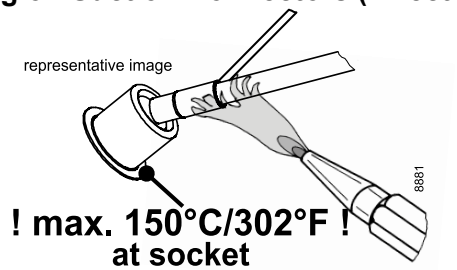

! max. 150°C/302°F ! at socket

brazing solder: phosphor (LP7) or silver

Refer to Product Bulletin: **Brazing on Suction Connectors (Compressors with Direct Suction Intake)**

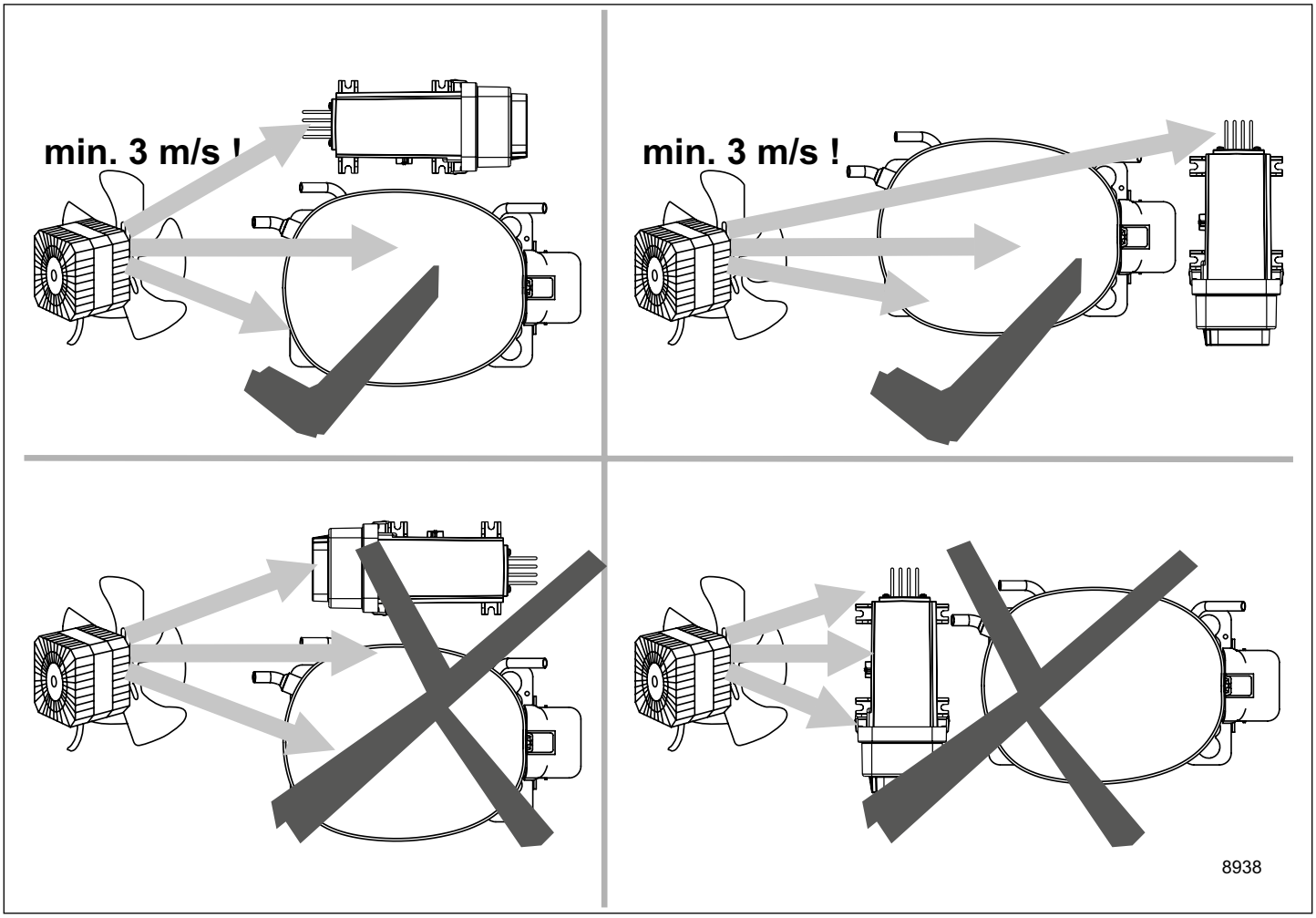

Airflow	3 m/s
Operating conditions	+ 5 °C to 43 °C - humidity < 90 % rH non condensing
Storage conditions	-25 °C to 70 °C - humidity < 90 % rH non condensing
Supply voltage	220-240 V (± 10 %)
Frequency	50/60 Hz
Input power, max.	1000 W

Dismantling, recycling, disposal: At the end of a compressor's lifecycle, proceed by separating and storing components according to their environmental impact. Parts that may cause pollution must be clearly identified and handled separately, ensuring appropriate disposal. Refrigerant gas must not be released into the environment and should be recovered by qualified operators. Compressor oil must also be collected separately. The compressor should be disposed of at specialized disposal centers in accordance with the applicable regulations. **Subject to modifications/alterations. www.secop.com**

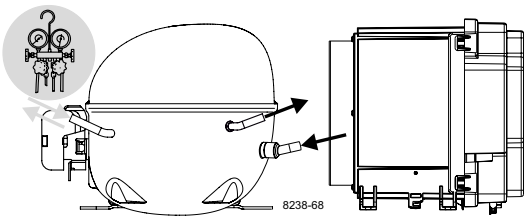

Instructions

NLV Compressors
100-240 V, 50/60 Hz
105N486x Series
Controllers

SECOP

Keep electrical equipment clear from oil, chemicals, and water



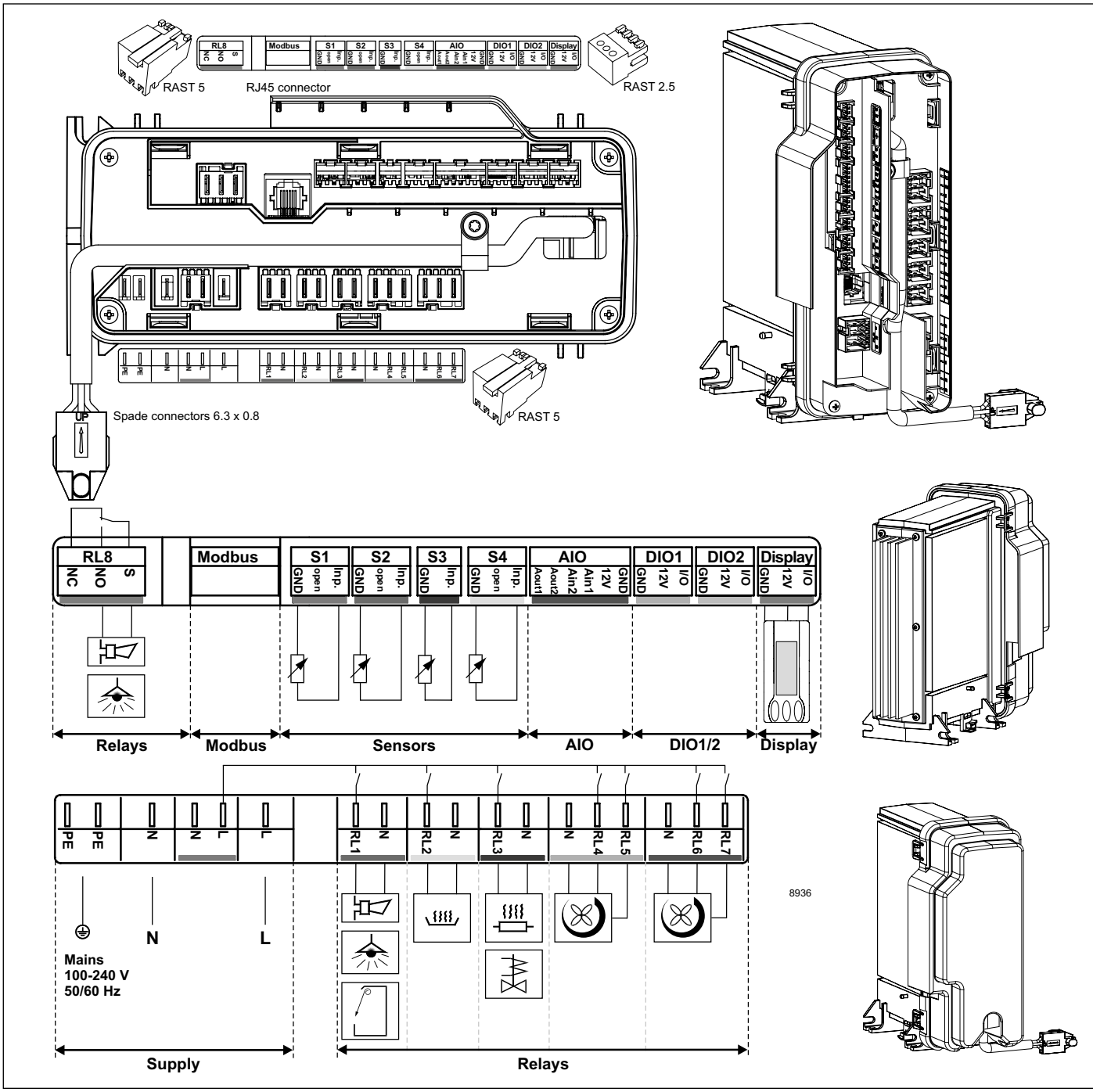

Mains	red	**S1**	red
RL 1	blue	**S2**	blue
RL 2	yellow	**S3**	black
RL 3	black	**S4**	yellow
RL 4, 5	grey	**AIO**	brown
RL 6, 7	brown	**DIO1**	grey
RL 8	green	**DIO2**	pink
		Display	green

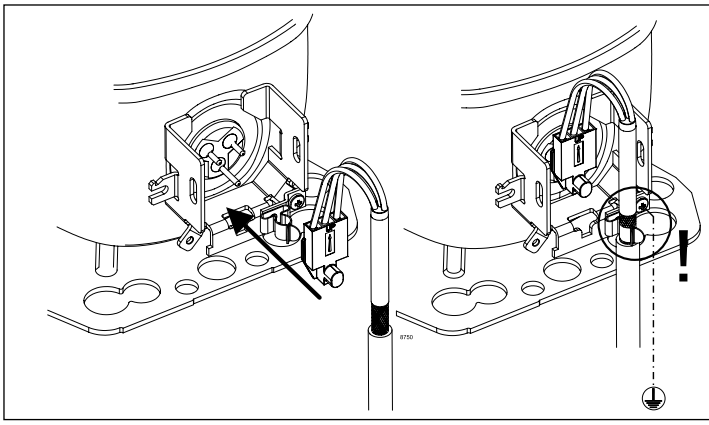

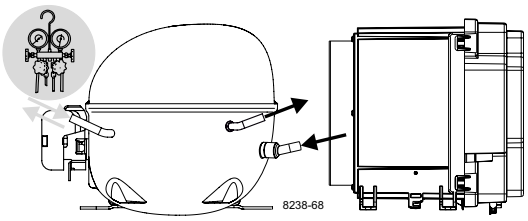

Instructions

NLV Compressors
100-240 V, 50/60 Hz
105N486x Series
Controllers

SECOP

Keep electrical equipment clear from oil, chemicals, and water



Service/Repair – R170, R290, R1270

(applies to all flammable refrigerants)



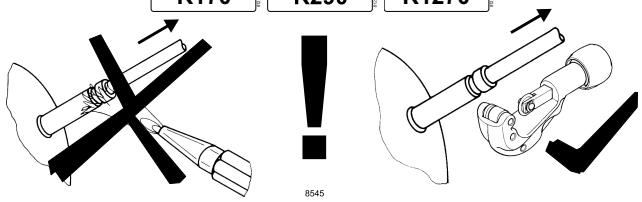

Brazing on Suction Connectors (Direct Intake)

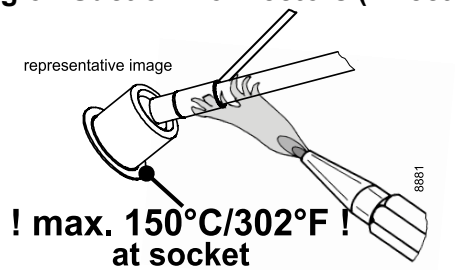

! max. 150°C/302°F ! at socket

brazing solder: phosphor (LP7) or silver

Refer to Product Bulletin: **Brazing on Suction Connectors (Compressors with Direct Suction Intake)**

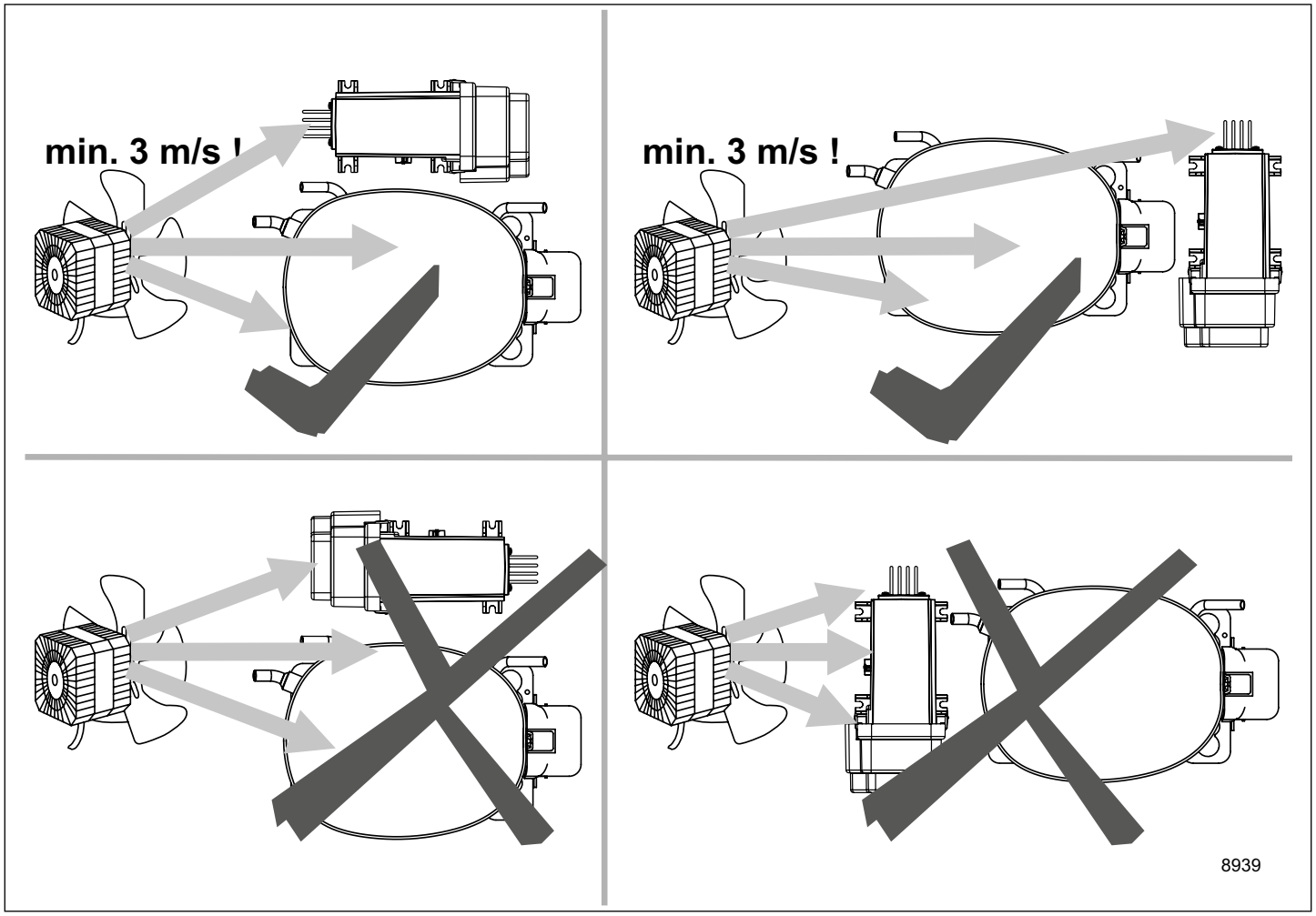

Airflow	3 m/s
Operating conditions	+ 5 °C to 43 °C - humidity < 90 % rH non condensing
Storage conditions	-25 °C to 70 °C - humidity < 90 % rH non condensing
Supply voltage	100-240 V (± 10 %)
Frequency	50/60 Hz
Input power, max.	1000 W

Dismantling, recycling, disposal: At the end of a compressor's lifecycle, proceed by separating and storing components according to their environmental impact. Parts that may cause pollution must be clearly identified and handled separately, ensuring appropriate disposal. Refrigerant gas must not be released into the environment and should be recovered by qualified operators. Compressor oil must also be collected separately. The compressor should be disposed of at specialized disposal centers in accordance with the applicable regulations. **Subject to modifications/alterations. www.secop.com**