Single
Packs

Single Pack BD35F.2 12/24V DC PM

Single pack code number: **195B4851**

Position	Title	Code	Amount
1	Compressor BD35F.2	101Z0700	1
2	Electronic unit 12/24V DC	101N0227	1
3	Bolt joint for one compressor | M6 | ø16mm	118-1917	1

Secop GmbH • Lise-Meitner-Straße 29 • 24941 Flensburg, Germany • Tel: +49 461 4941 0 • **www.secop.com**

Secop accepts no responsibility for possible errors in catalogs, brochures, and other printed material. Secop reserves the right to alter its products without notice. This also applies to products already on order provided that such alterations can be made without subsequential changes being necessary to specifications already agreed. All trademarks in this material are the property of the respective companies. Secop and the Secop logotype are trademarks of Secop GmbH. All rights reserved.

BD35F.2
Direct Current Compressor
R134a, R1234yf
12/24V DC

General

Code number (without electronic unit)	101Z0700
Electronic unit 12/24V DC	101N0226, 30 pcs: 101N0227
Compressors on pallet	150

Approvals

R134a/R1234yf
UL



Approval mark Yellow warning label

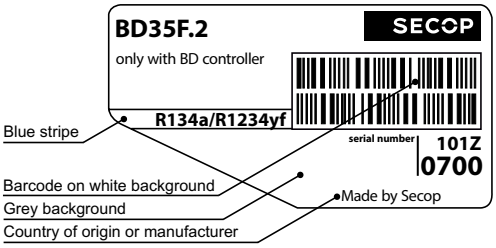

Application

Application		LBP/MBP
Evaporating temperature	°C	-30 to 0 (10)
Voltage range	VDC	9.6 - 17 / 21.3 - 31.5
Max. condensing temperature continuous (short)	°C	60 (70)
Max. winding temperature continuous (short)	°C	125 (135)

Cooling requirements

Application	LBP	MBP	HBP
32°C	S	S	–
38°C	S	S	–
43°C	S	S	–
Remarks on application:			

S = Static cooling normally sufficient
O = Oil cooling
F_1 = Fan cooling 1.5 m/s (compressor compartment temperature equal to ambient temperature)
F_2 = Fan cooling 3.0 m/s necessary
SG = Suction gas cooling normally sufficent
– = not applicable in this area

Motor

Motor type		variable speed
Resistance, all 3 windings (25°C)	Ω	0.12

Design

Displacement	cm^3	2.00
Oil quantity (type)	cm^3	150 (polyolester)
Maximum refrigerant charge	g	300
Free gas volume in compressor	cm^3	870
Weight - Compressor/Electronic unit	kg	4.05 / 0.14

Standard battery protection settings (refer to electronic unit *Instructions* for optional settings)

Voltage		12V	24V
Cut out	VDC	10.4	22.8
Cut in	VDC	11.7	24.2

Dimensions

Height	mm	A	137
		B	135
		B1	128
		B2	73
Suction connector	location/I.D. mm | angle	C	6.2 | 40°
	material | comment		Cu-plated steel | Al cap
Process connector	location/I.D. mm | angle	D	6.2 | 45°
	material | comment		Cu-plated steel | Al cap
Discharge connector	location/I.D. mm | angle	E	5.0 | 21°
	material | comment		Cu-plated steel | Al cap
Connector tolerance	I.D. mm		±0.09, on 5.0 +0.12/+0.20
Remarks:			

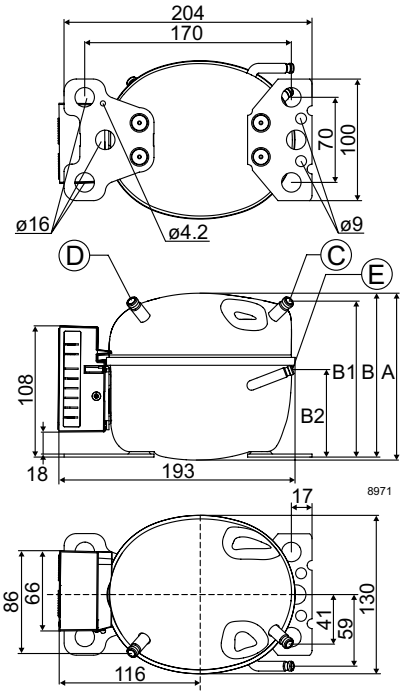

Performance Data with Refrigerant R134a

Capacity (EN 12900 Household/CECOMAF) 12V DC, static cooling **watt**

rpm \ °C	-30	-25	-23.3	-20	-15	-10	-5	0	5	7.2	10	15
2,000	16.0	23.8	26.7	32.9	43.7	56.5	71.8	89.8	111	121	136	
2,500	18.8	29.9	33.9	41.9	55.4	71.1	89.8	112	139	152		
3,000	22.4	32.9	37.1	46.1	62.5	82.2	106	133				
3,500	27.0	35.9	40.2	50.3	69.8	93.9	122					

Capacity (ASHRAE LBP) 12V DC, static cooling **watt**

rpm \ °C	-30	-25	-23.3	-20	-15	-10	-5	0	5	7.2	10	15
2,000	20.0	29.7	33.4	41.1	54.6	70.6	89.6	112	138	151	169	
2,500	23.6	37.5	42.4	52.4	69.1	88.7	112	140	173	190		
3,000	28.1	41.2	46.5	57.8	78.1	103	132	166				
3,500	33.9	45.2	50.5	63.1	87.3	117	153					

Power consumption 12V DC, static cooling **watt**

rpm \ °C	-30	-25	-23.3	-20	-15	-10	-5	0	5	7.2	10	15
2,000	18.5	24.0	25.8	29.0	33.7	38.4	43.2	48.4	54.1	56.8	60.6	
2,500	23.2	31.1	33.6	38.1	44.4	50.4	56.3	62.5	69.2	72.4		
3,000	30.7	36.2	38.5	43.2	51.0	59.2	67.5	75.4				
3,500	36.1	43.2	45.8	51.3	60.0	69.4	79.0					

Current consumption (for 12V applications the following must be doubled) **A**

rpm \ °C	-30	-25	-23.3	-20	-15	-10	-5	0	5	7.2	10	15
2,000	1.55	2.00	2.15	2.42	2.81	3.20	3.60	4.03	4.51	4.74	5.05	
2,500	1.93	2.59	2.80	3.17	3.70	4.20	4.69	5.21	5.77	6.03		
3,000	2.55	3.02	3.21	3.60	4.25	4.93	5.63	6.28				
3,500	3.01	3.60	3.82	4.27	5.00	5.78	6.58					

COP (EN 12900 Household/CECOMAF) 12V DC, static cooling **W/W**

rpm \ °C	-30	-25	-23.3	-20	-15	-10	-5	0	5	7.2	10	15
2,000	0.86	0.99	1.04	1.13	1.29	1.47	1.66	1.86	2.05	2.14	2.24	
2,500	0.81	0.96	1.01	1.10	1.25	1.41	1.59	1.79	2.01	2.10		
3,000	0.73	0.91	0.96	1.07	1.23	1.39	1.56	1.76				
3,500	0.75	0.83	0.88	0.98	1.16	1.35	1.55					

COP (ASHRAE LBP) 12V DC, static cooling **W/W**

rpm \ °C	-30	-25	-23.3	-20	-15	-10	-5	0	5	7.2	10	15
2,000	1.08	1.24	1.30	1.42	1.62	1.85	2.08	2.33	2.57	2.68	2.81	
2,500	1.02	1.21	1.26	1.38	1.56	1.77	2.00	2.25	2.52	2.64		
3,000	0.91	1.14	1.21	1.34	1.54	1.74	1.96	2.21				
3,500	0.94	1.04	1.10	1.23	1.46	1.70	1.94					

Test conditions with electronic unit		EN 12900/CECOMAF	ASHRAE LBP
Condensing temperature	101N0226	55°C	54.4°C
Ambient temperature		32°C	32°C
Suction gas temperature		32°C	32°C
Liquid temperature		no subcooling	32°C

Accessories for BD35F.2		Code number
Bolt joint for one comp.	Ø:16 mm	118-1917
Bolt joint in quantities	Ø:16 mm	118-1918
Snap-on in quantities	Ø:16 mm	118-1919
Automobile fuse, DIN 7258	12V: 15A | 24V: 15A	Not deliverable from Secop
Main switch	min. 20A	

Compressor speed

Electronit unit Code number	Resistor (R1) [Ω] calculated values	Motor speed [rpm]
101N0226	0	2,000
	277	2,500
	692	3,000
	1523	3,500

Wire dimensions

Size		Max. length* 12V operation		Max. length* 24V operation	
Cross section	AWG				
[mm²]	[Gauge]	[m]	[ft.]	[m]	[ft.]
2.5	12	2.5	8	5	16
4	12	4	13	8	26
6	10	6	20	12	39
10	8	10	33	20	66

*Length between battery and electronic unit

Operational errors

LED flashes	Error type
5	**Thermal cut-out of electronic unit** (If the refrigeration system has been too heavily loaded, or if the ambient temperature is higher or lower than 10°C, the electronic will cut out).
4	**Minimum motor speed error** (If the refrigeration system is too heavily loaded, the motor cannot maintain minimum speed at approximately 1,850 rpm).
3	**Motor start error** (The rotor is blocked or the differential pressure in the refrigeration system is too high (>5 bar)).
2	**Too many start attempts or fan over current** (Too many compressor or fan starts in short time or fan current higher than $0.5A_{avg}$).
1	**Battery protection cut-out** (The voltage is outside the cut-out setting).

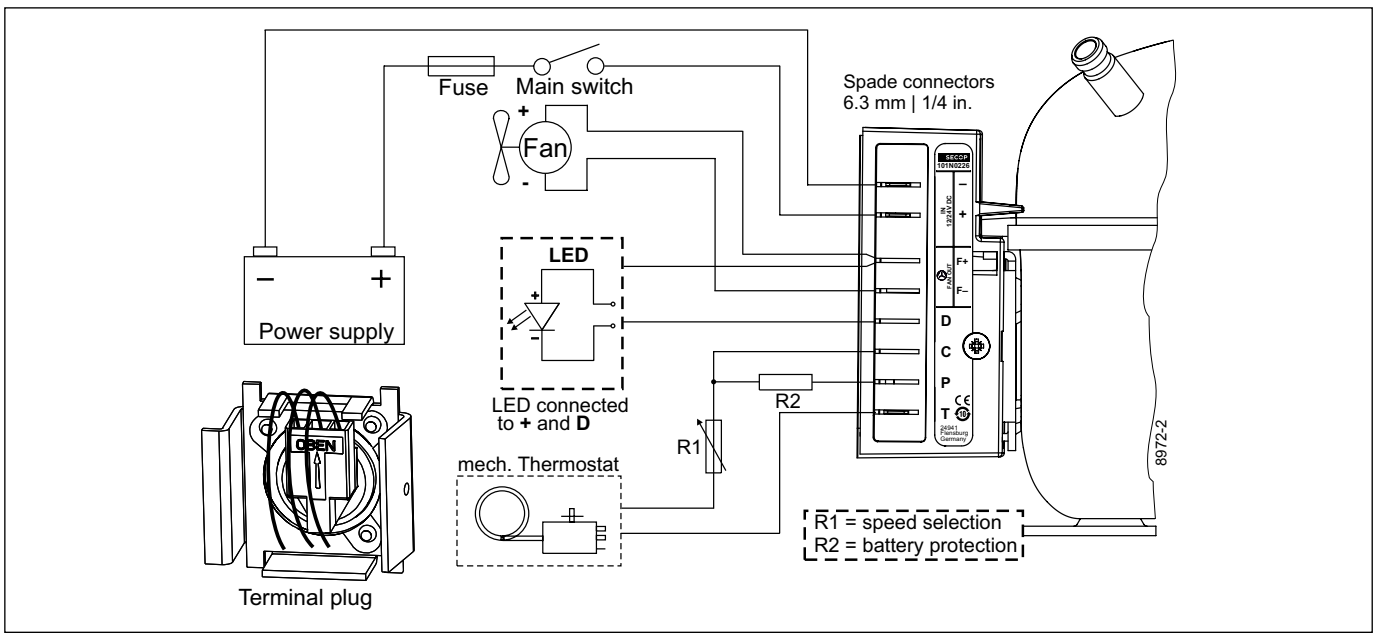

Performance Data with Refrigerant R1234yf

Capacity (EN 12900 Household/CECOMAF) 12V DC, static cooling **watt**

rpm \ °C	-30	-25	-23.3	-20	-15	-10	-5	0	5	7.2	10	15
2,000	17.0	24.8	27.8	34.1	45.1	57.7	71.9	87.8	105	114	125	
2,500	18.4	29.6	33.8	42.5	57.3	73.7	91.8	112	133	143		
3,000	25.5	35.3	39.2	47.6	62.5	80.5	102	127				
3,500	30.2	39.3	43.3	52.5	69.8	91.0	116					

Capacity (ASHRAE LBP) 12V DC, static cooling **watt**

rpm \ °C	-30	-25	-23.3	-20	-15	-10	-5	0	5	7.2	10	15
2,000	22.1	32.3	36.2	44.5	58.7	75.1	93.6	114	137	148	163	
2,500	24.1	38.5	44.0	55.3	74.4	95.7	119	145	173	186		
3,000	33.5	46.3	51.4	62.3	81.8	105	133	165				
3,500	39.4	51.3	56.6	68.7	91.3	119	152					

Power consumption 12V DC, static cooling **watt**

rpm \ °C	-30	-25	-23.3	-20	-15	-10	-5	0	5	7.2	10	15
2,000	20.1	25.3	27.0	30.2	35.0	39.8	44.5	49.3	54.2	56.4	59.2	
2,500	25.1	32.9	35.4	40.1	46.7	53.0	58.8	64.4	69.7	72.0		
3,000	34.1	38.8	40.8	45.1	52.3	60.1	67.9	75.2				
3,500	40.5	47.0	49.4	54.4	62.5	71.1	79.9					

Current consumption (for 12V applications the following must be doubled) **A**

rpm \ °C	-30	-25	-23.3	-20	-15	-10	-5	0	5	7.2	10	15
2,000	1.73	2.19	2.35	2.64	3.06	3.49	3.91	4.34	4.79	4.99	5.26	
2,500	2.17	2.84	3.06	3.46	4.05	4.61	5.14	5.65	6.15	6.36		
3,000	2.91	3.31	3.48	3.84	4.47	5.15	5.83	6.48				
3,500	3.45	4.00	4.21	4.63	5.32	6.07	6.83					

COP (EN 12900 Household/CECOMAF) 12V DC, static cooling **W/W**

rpm \ °C	-30	-25	-23.3	-20	-15	-10	-5	0	5	7.2	10	15
2,000	0.84	0.98	1.03	1.13	1.29	1.45	1.61	1.78	1.95	2.02	2.11	
2,500	0.73	0.90	0.95	1.06	1.22	1.39	1.56	1.73	1.91	1.99		
3,000	0.75	0.91	0.96	1.06	1.20	1.34	1.50	1.68				
3,500	0.75	0.84	0.88	0.97	1.12	1.28	1.45					

COP (ASHRAE LBP) 12V DC, static cooling **W/W**

rpm \ °C	-30	-25	-23.3	-20	-15	-10	-5	0	5	7.2	10	15
2,000	1.10	1.28	1.34	1.48	1.68	1.90	2.11	2.33	2.55	2.65	2.77	
2,500	0.96	1.17	1.24	1.38	1.60	1.82	2.04	2.27	2.50	2.60		
3,000	0.98	1.19	1.26	1.39	1.57	1.76	1.97	2.21				
3,500	0.97	1.09	1.15	1.27	1.47	1.68	1.91					

Test conditions with electronic unit		EN 12900/CECOMAF	ASHRAE LBP
Condensing temperature	101N0226	55°C	54.4°C
Ambient temperature		32°C	32°C
Suction gas temperature		32°C	32°C
Liquid temperature		no subcooling	32°C

Accessories for BD35F.2		Code number
Bolt joint for one comp.	Ø:16 mm	118-1917
Bolt joint in quantities	Ø:16 mm	118-1918
Snap-on in quantities	Ø:16 mm	118-1919
Automobile fuse, DIN 7258	12V: 15A | 24V: 15A	Not deliverable from Secop
Main switch	min. 20A	

Compressor speed

Electronit unit Code number	Resistor (R1) [Ω] calculated values	Motor speed [rpm]
101N0226	0	2,000
	277	2,500
	692	3,000
	1523	3,500

Wire dimensions

Size		Max. length* 12V operation		Max. length* 24V operation	
Cross section	AWG				
[mm²]	[Gauge]	[m]	[ft.]	[m]	[ft.]
2.5	12	2.5	8	5	16
4	12	4	13	8	26
6	10	6	20	12	39
10	8	10	33	20	66

*Length between battery and electronic unit

Operational errors

LED flashes	Error type
5	**Thermal cut-out of electronic unit** (If the refrigeration system has been too heavily loaded, or if the ambient temperature is higher or lower than 10°C, the electronic will cut out).
4	**Minimum motor speed error** (If the refrigeration system is too heavily loaded, the motor cannot maintain minimum speed at approximately 1,850 rpm).
3	**Motor start error** (The rotor is blocked or the differential pressure in the refrigeration system is too high (>5 bar)).
2	**Too many start attempts or fan over current** (Too many compressor or fan starts in short time or fan current higher than $0.5A_{avg}$).
1	**Battery protection cut-out** (The voltage is outside the cut-out setting).

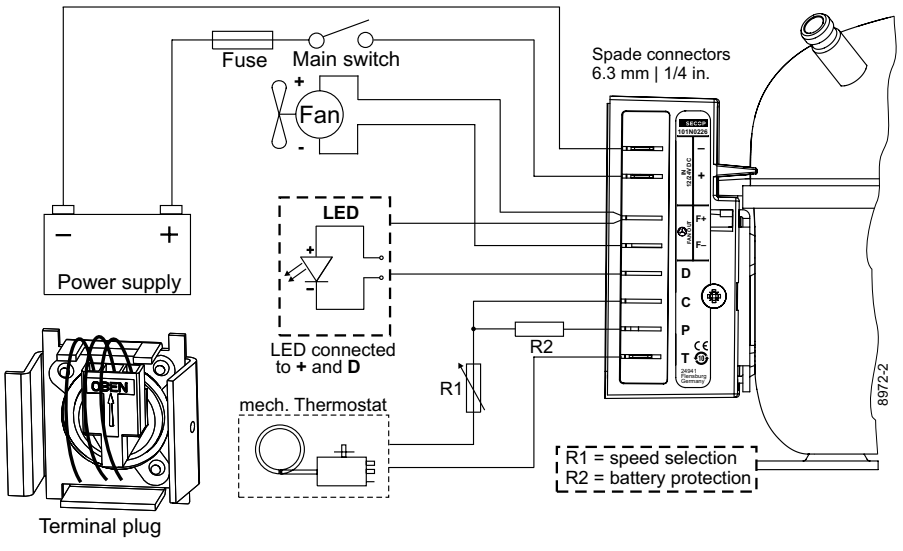

Secop accepts no responsibility for possible errors in catalogs, brochures, and other printed material. Secop reserves the right to alter its products without notice. This also applies to products already on order provided that such alterations can be made without subsequential changes being necessary to specifications already agreed. All trademarks in this material are the property of the respective companies. Secop and the Secop logotype are trademarks of Secop GmbH. All rights reserved. **www.secop.com**

Keep electrical equipment clear from oil, chemicals, and water

BD Compressors

SECOP

Service/Repair – R290, R600a, R170, R1270, R1234yf (applies to all flammable refrigerants)

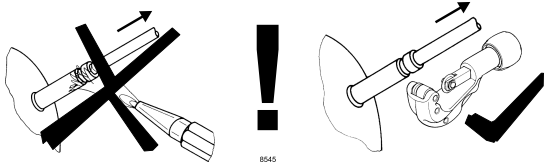



TOOL4COOL®

BD Nano

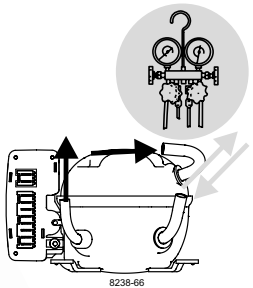

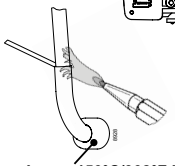

Do not heat up the bottom of the discharge connector directly.
Do not braze longer than 10 seconds and wait for 5 minutes for the next soldering attempt (Product Bulletin DES.N.101.M).

BD Micro

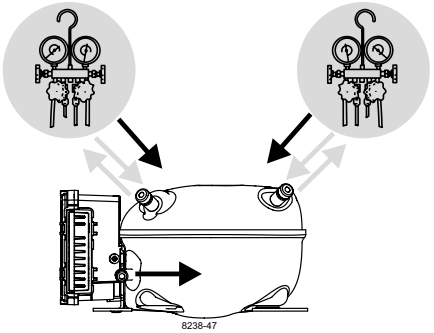

BD-P

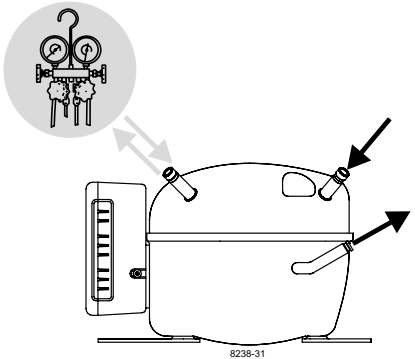

Dismantling, recycling, disposal: At the end of a compressor's lifecycle, proceed by separating and storing components according to their environmental impact. Parts that may cause pollution must be clearly identified and handled separately, ensuring appropriate disposal. Refrigerant gas must not be released into the environment and should be recovered by qualified operators. Compressor oil must also be collected separately. The compressor should be disposed of at specialized disposal centers in accordance with the applicable regulations. **Subject to modifications/alterations. www.secop.com**

Instructions for Electronic Units are available for download on **www.secop.com**

BD Compressors

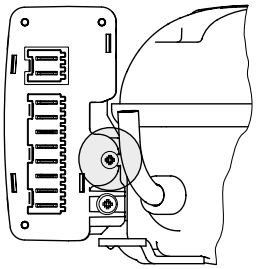

BD Nano

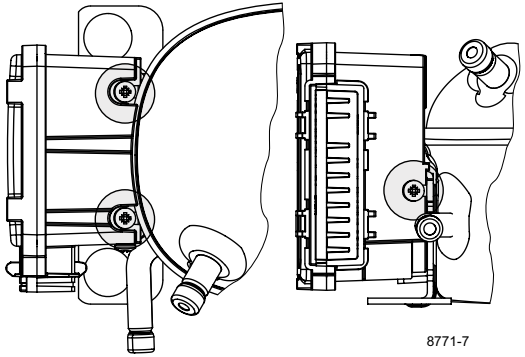

BD Micro

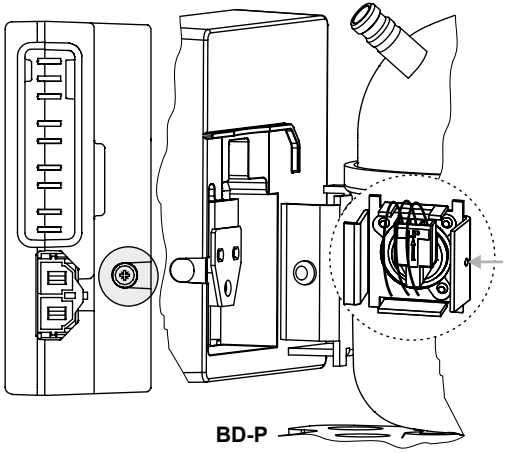

BD-P

BD Nano
Attach the electronic unit by pressing it linearly onto the compressor's Fusite® connector and bracket. The electronic unit must be mounted straight onto the compressor terminals. Ensure correct alignment before pressing it into place. Apply pressure until both screw heads snap into place. For high-vibration environments, the unit can optionally be secured with a third screw (marked in grey).

BD Micro
Attach the electronic unit by pressing it linearly onto the compressor's Fusite® connector and bracket. The electronic unit must be mounted straight onto the compressor terminals. Ensure correct alignment before pressing it into place. Secure it with at least two screws, either from the side or from above (marked in grey).

BD-P
The cable plug of the electronic unit is connected to the compressor's Fusite® connector. The electronic unit is then mounted onto the compressor bracket. First, the left side is attached; next, the right side is pressed sideways over the screw on the bracket (marked in grey). The unit snaps into place on the bracket and is now securely fixed to the compressor. An earth connection (via the compressor baseplate) can be used if required.

Dismantling, recycling, disposal: At the end of a compressor's lifecycle, proceed by separating and storing components according to their environmental impact. Parts that may cause pollution must be clearly identified and handled separately, ensuring appropriate disposal. Refrigerant gas must not be released into the environment and should be recovered by qualified operators. Compressor oil must also be collected separately. The compressor should be disposed of at specialized disposal centers in accordance with the applicable regulations. **Subject to modifications/alterations. www.secop.com**