Single
Packs

Single Pack MN13UVULTM 100-240V 50/60Hz PM

Single pack code number: **195B4853**

Position	Title	Code	Amount
1	Compressor MN13UVULTM	105M0852	1
2	Electronic unit SLVE	105N4933	1
3	Cord relief	103N1004	1
4	Cover	103N2008	1

Secop GmbH • Lise-Meitner-Straße 29 • 24941 Flensburg, Germany • Tel: +49 461 4941 0 • **www.secop.com**

Secop accepts no responsibility for possible errors in catalogs, brochures, and other printed material. Secop reserves the right to alter its products without notice. This also applies to products already on order provided that such alterations can be made without subsequential changes being necessary to specifications already agreed. All trademarks in this material are the property of the respective companies. Secop and the Secop logotype are trademarks of Secop GmbH. All rights reserved.

Model
MN13UVULTM

Sales code:
105M0852

Compressor Data

Refrigerant(s)	**R170 / R290 / R1270**
Refr. charge - tech. limit	**300g / 10.58oz**
Weight	**10.80 kg / 23.81lbs**
Displacement	**12.55 cm3 / 0.77cu.in**
Compressors on pallet	**80**



General – Configurations With MN13UVULTM and Controller

–	**Conf. 1**	**Conf. 2**	**Conf. 3**
Sales code single pack:	105N4962	105N4962	105N4962
Power supply (nominal)	100-240 V,50/60 Hz	100-240 V,50/60 Hz	100-240 V,50/60 Hz
Number of phases	1~AC	1~AC	1~AC
Approvals	UL, VDE, CCC	UL, VDE	UL, VDE
Starting torque	HST	HST	HST
Refrigerant	R290	R170	R1270
Application	L+MBP	ULT	VLBP
Hot gas defrost	OK	OK	OK
Long interval pull down	OK	–	–
Protection	Mechanic	Mechanic	Mechanic

Application Notes

- Provision for PE Grounding is located at the PE Stamp on the compressor
- Direct suction intake with telescope
- Compressor for laboratory and medical applications.
- Check special warranty terms with Secop Sales.

Model
MN13UVULTM

Sales code:
105M0852

Compressor Design

Oil type	**POE**	Motor protection	**internal**
Oil viscosity	**32cSt**	Max. winding temp.	**125 °C**
Oil quantity	**320 cm3 / 10.82fl.oz**	Max. discharge temp.	**130°C / 266°F**
Free gas volume comp.	**2,360 cm3 / 79.80fl.oz**		

Compressor Dimensions

Housing

A Height	**203mm / 7.99in**
B Height	**197mm / 7.76in**
C Length shell	**205mm / 8.07in**
D Length w. cover	**252mm / 9.92in**
E Width	**166mm / 6.54in**

Find 3D Model here

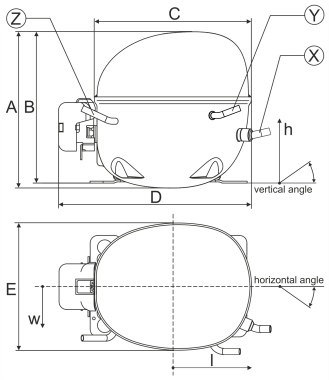

Connectors	Suction X	Discharge Y	Process Z
Diameter [mm]	øi 8.11–8.29 / 0.32–0.33in	øi 6.11–6.29 / 0.24–0.25in	øi 6.11–6.29 / 0.24–0.25in
Material	CU	CU	CU
Horizontal angle ±2°	0°	0°	0°
Vertical angle ±2°	15°	21°	155°
Position l/h/w [mm]	132/68.5/56.7 / 5.20/2.70/2.23in	94/101.7/81 / 3.70/4.00/3.19in	-109.3/94.3/72 / -4.30/3.71/2.83in
Straight tube l. [mm]	12 / 0.47in	12 / 0.47in	12 / 0.47in

Mounting Accessories

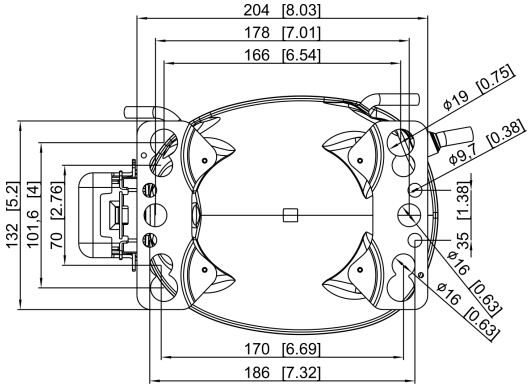

Dimensions in mm [in]

Bolt joint

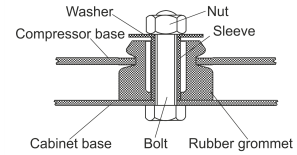

Snap-on

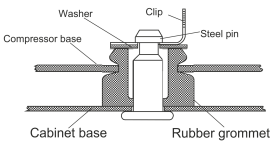

	one comp.	multi pack
Bolt joint | M6 | ø16mm	118-1917	118-1918
Bolt joint | ø1/4" | ø16mm	118-1946	–
Bolt joint | ø1/4" | ø19mm	118-1949	–
Snap-on | ø7,3 | ø16mm	118-1947	118-1919

Model
MN13UVULTM System Design

Sales code:
105M0852

System Design

Operation Pressure Range R290

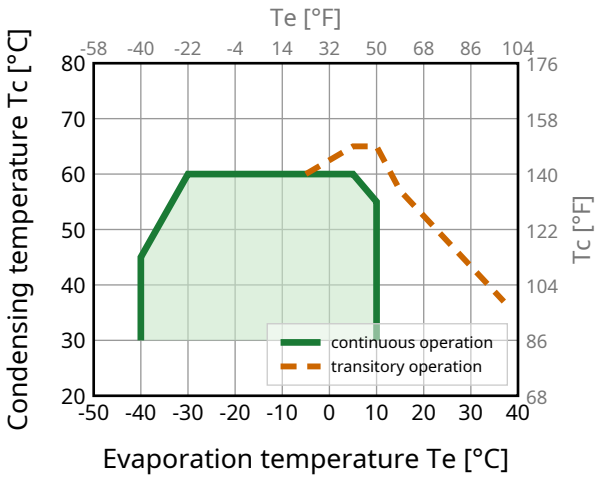

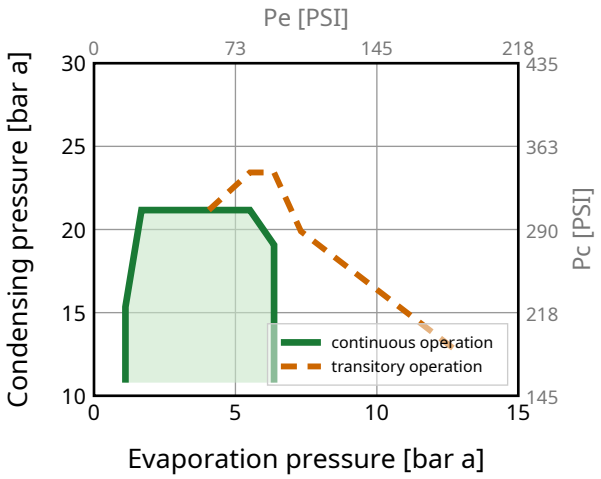

Operation Pressure Range R170

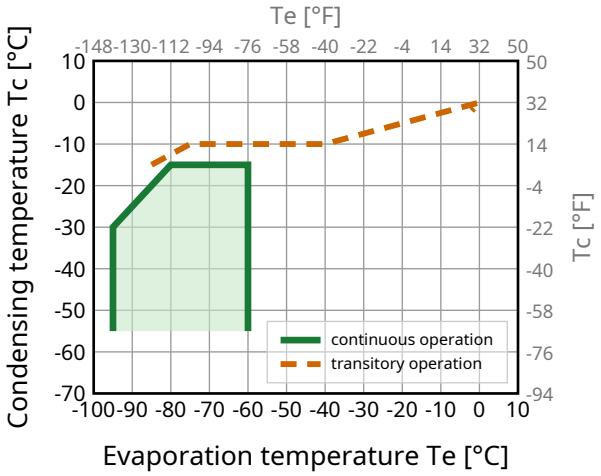

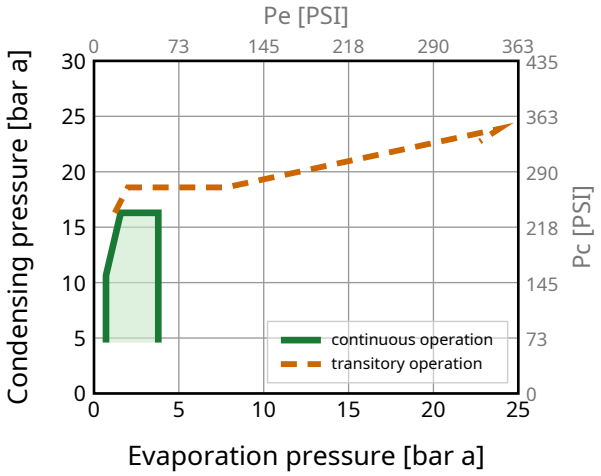

Operation Pressure Range R1270

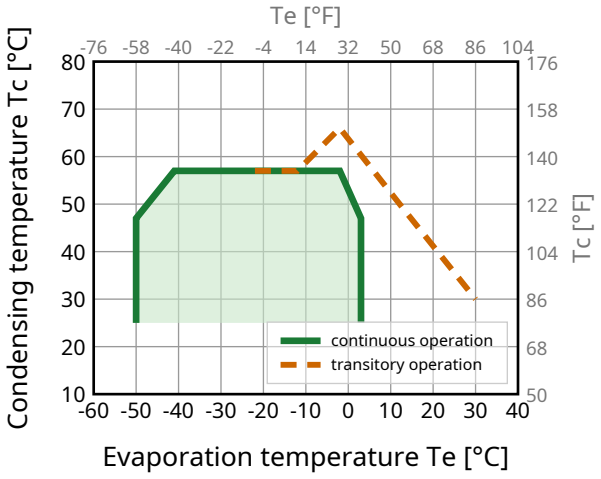

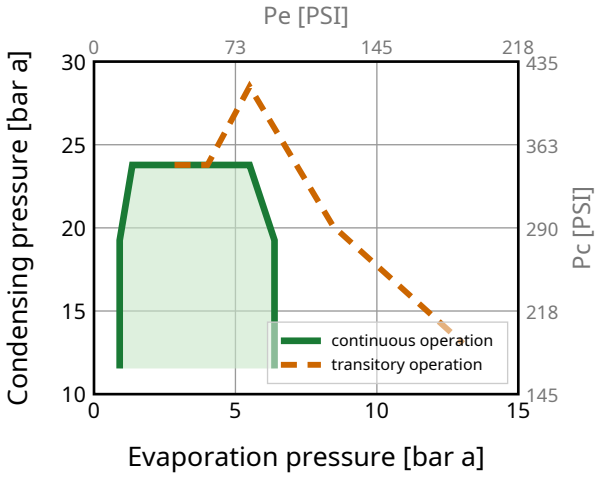

Model
MN13UVULTM

Sales code:
105M0852

System Cooling

Compressor and Controller Cooling: fan 3m/s

Ensure proper airflow of 3 m/s at both compressor and electronic units.

The airflow for the electronics must be directed to the heat sink.

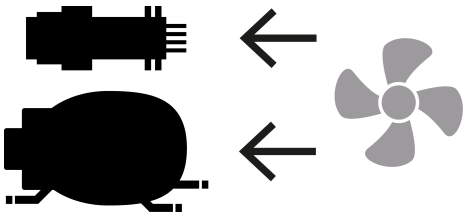

Accessories (Compressor + Controller)

103N2008	plastic cover	1 pcs

Operation Limits

Suctiongas temperature < +20 °C (contininous operation)

Model Sales code:

MN13UVULTM Controller Overview **105M0852**

Controller Overview

–	**Conf. 1, 2, 3**
Sales code single pack:	105N4962
Sales code industry pack:	105N4963 (8)
Voltage nom.:	100-240 V,50/60 Hz
Voltage range	90-150/180-270 V
Max output power	1000 W
Compressor speed range:	2000-4500 rpm
Cable length:	915 mm
Protection class:	IP54
LRA (Locked Rotor Amperage):	1,2 A
AEO and Defrost pin	Yes
Frequency input	Yes
Modbus input	SWI
Controller Wiring	» Controller Wiring

Controller Dimensions

Conf. 1, 2, 3

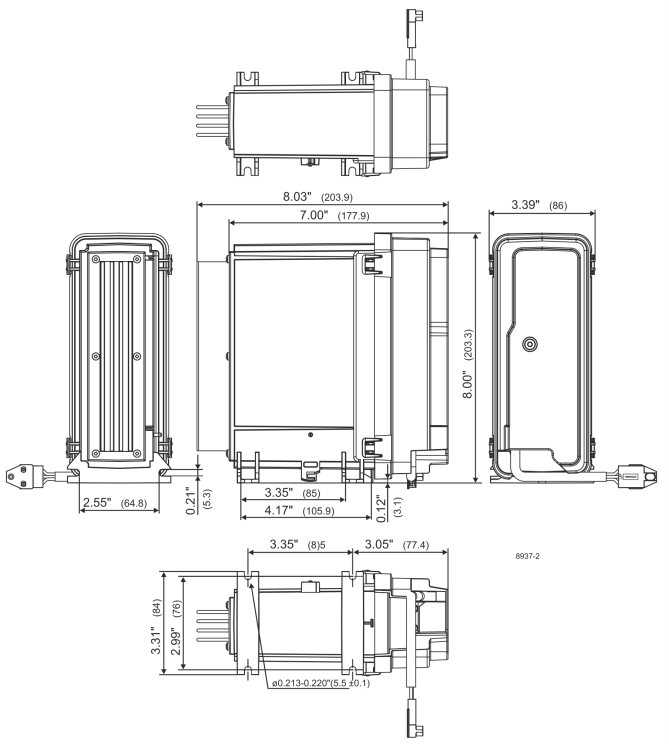

Operating Instructions

For proper installation and operation of variable-speed compressors and controllers, please refer to the Operating Instructions. The document covers electrical installation, speed control, and technical data for the controller.
» Download Operating Instructions

Model
MN13UVULTM

Sales code:
105M0852

Standard Conditions — 2000 rpm

R290, 240 V/50 Hz, fan 3m/s

pe	pc	RGT	Tliq	Cooling capacity			COP	EER	P	I	ṁ	
[°C] [°F]	[°C] [°F]	[°C] [°F]	[°C] [°F]	[W]	[Btu/h]	[kcal/h]	[W/W]	[Btu/Wh]	[W]	[A]	[kg/h]	
-23.3 -10	54.4 129.9	32.2 90	32.2 90	**440**	1501	378	**1.77**	6.03	249	1.09	4.47	**ASHRAE LBP**
-25 -13	55 131	32 89.6	55 131	**329**	1122	283	**1.38**	4.69	239	1.05	4.12	**CECOMAF LBP**
-35 -31	40 104	20 68	40 104	**242**	825	208	**1.47**	5.01	164	0.77	2.77	**EN12900 LBP**
-6.7 20	54.4 129.9	35 95	46.1 115	**767**	2618	660	**2.18**	7.45	351	1.52	8.78	**ASHRAE MBP**
-10 14	55 131	32 89.6	55 131	**613**	2091	527	**1.83**	6.25	334	1.45	7.79	**CECOMAF MBP**
-10 14	45 113	20 68	45 113	**667**	2275	574	**2.25**	7.67	297	1.29	8.21	**EN12900 MBP**

Performance Tables — 2000 rpm

R290, 240 V/50 Hz, fan 3m/s

pc= 45/113 | RGT= 32/89.6 | Tliq= 45/113 | °C/°F

pe		Cooling capacity			COP	EER	P	I	ṁ
[°C]	[°F]	[W]	[Btu/h]	[kcal/h]	[W/W]	[Btu/Wh]	[W]	[A]	[kg/h]
-40	-40	**174**	594	150	**1.19**	4.04	147	0.71	1.96
-30	-22	**299**	1021	257	**1.53**	5.23	195	0.88	3.38
-20	-4	**468**	1599	403	**1.89**	6.44	248	1.09	5.33
-10	14	**693**	2366	596	**2.34**	7.98	297	1.29	7.96
0	32	**985**	3361	847	**2.98**	10.15	331	1.44	11.45
10	50	**1355**	4623	1165	**3.96**	13.50	342	1.48	16.02

pc= 55/131 | RGT= 32/89.6 | Tliq= 55/131 | °C/°F

-40	-40	**143**	487	123	**0.91**	3.12	156	0.74	1.77
-30	-22	**258**	879	222	**1.24**	4.22	209	0.93	3.22
-20	-4	**411**	1401	353	**1.51**	5.17	271	1.19	5.17
-10	14	**613**	2091	527	**1.83**	6.25	334	1.45	7.79
0	32	**875**	2987	753	**2.25**	7.68	389	1.68	11.29
10	50	**1210**	4127	1040	**2.84**	9.70	425	1.82	15.89

Model
MN13UVULTM

Sales code:
105M0852

Standard Conditions — 4500 rpm

R290, 240 V/50 Hz, fan 3m/s

pe	pc	RGT	Tliq	Cooling capacity			COP	EER	P	I	ṁ	
[°C] [°F]	[°C] [°F]	[°C] [°F]	[°C] [°F]	[W]	[Btu/h]	[kcal/h]	[W/W]	[Btu/Wh]	[W]	[A]	[kg/h]	
-23.3 -10	54.4 129.9	32.2 90	32.2 90	**1025**	3499	882	**1.81**	6.18	566	2.42	10.42	**ASHRAE LBP**
-25 -13	55 131	32 89.6	55 131	**767**	2617	660	**1.41**	4.82	542	2.32	9.61	**CECOMAF LBP**
-35 -31	40 104	20 68	40 104	**564**	1924	485	**1.50**	5.10	377	1.64	6.47	**EN12900 LBP**
-6.7 20	54.4 129.9	35 95	46.1 115	**1774**	6053	1526	**2.13**	7.25	834	3.55	20.31	**ASHRAE MBP**
-10 14	55 131	32 89.6	55 131	**1419**	4843	1221	**1.81**	6.19	783	3.33	18.05	**CECOMAF MBP**
-10 14	45 113	20 68	45 113	**1540**	5255	1325	**2.14**	7.29	720	3.07	18.95	**EN12900 MBP**

Performance Tables — 4500 rpm

R290, 240 V/50 Hz, fan 3m/s

pc= 45/113 | RGT= 32/89.6 | Tliq= 45/113 | °C/°F

pe		Cooling capacity			COP	EER	P	I	ṁ
[°C]	[°F]	[W]	[Btu/h]	[kcal/h]	[W/W]	[Btu/Wh]	[W]	[A]	[kg/h]
-40	-40	**405**	1383	349	**1.24**	4.24	326	1.43	4.56
-30	-22	**698**	2381	600	**1.56**	5.31	448	1.93	7.88
-20	-4	**1087**	3710	935	**1.87**	6.38	582	2.49	12.37
-10	14	**1601**	5463	1377	**2.22**	7.58	720	3.07	18.39
0	32	**2266**	7732	1949	**2.64**	9.00	859	3.65	26.35
10	50	**3109**	10607	2673	**3.14**	10.71	990	4.21	36.77

pc= 55/131 | RGT= 32/89.6 | Tliq= 55/131 | °C/°F

-40	-40	**329**	1124	283	**0.98**	3.33	337	1.47	4.09
-30	-22	**602**	2053	517	**1.28**	4.38	469	2.02	7.52
-20	-4	**956**	3262	822	**1.54**	5.26	620	2.65	12.03
-10	14	**1419**	4843	1221	**1.81**	6.19	783	3.33	18.05
0	32	**2018**	6887	1736	**2.12**	7.23	952	4.05	26.03
10	50	**2780**	9486	2391	**2.48**	8.45	1123	4.77	36.53

Model
MN13UVULTM

Sales code:
105M0852

Optimal Performance

R290, 240 V/50 Hz, fan 3m/s
Shows the speed (RPM) that achieves the highest COP at each standard condition.

pe	pc	RGT	Tliq	Cooling capacity			COP	EER	P	RPM	
[°C] [°F]	[°C] [°F]	[°C] [°F]	[°C] [°F]	[W]	[Btu/h]	[kcal/h]	[W/W]	[Btu/Wh]	[W]	[rpm]	
-23.3 -10	54.4 129.9	32.2 90	32.2 90	**678**	2313	583	**1.83**	6.24	371	**3000**	**ASHRAE LBP**
-25 -13	55 131	32 89.6	55 131	**506**	1727	435	**1.43**	4.87	355	**3000**	**CECOMAF LBP**
-35 -31	40 104	20 68	40 104	**372**	1269	320	**1.52**	5.20	244	**3000**	**EN12900 LBP**
-6.7 20	54.4 129.9	35 95	46.1 115	**1190**	4062	1024	**2.23**	7.60	535	**3000**	**ASHRAE MBP**
-10 14	55 131	32 89.6	55 131	**950**	3240	817	**1.87**	6.39	507	**3000**	**CECOMAF MBP**
-10 14	45 113	20 68	45 113	**1036**	3534	891	**2.28**	7.77	455	**3000**	**EN12900 MBP**

Cooling Capacity vs. COP

R290, 240 V/50 Hz, fan 3m/s

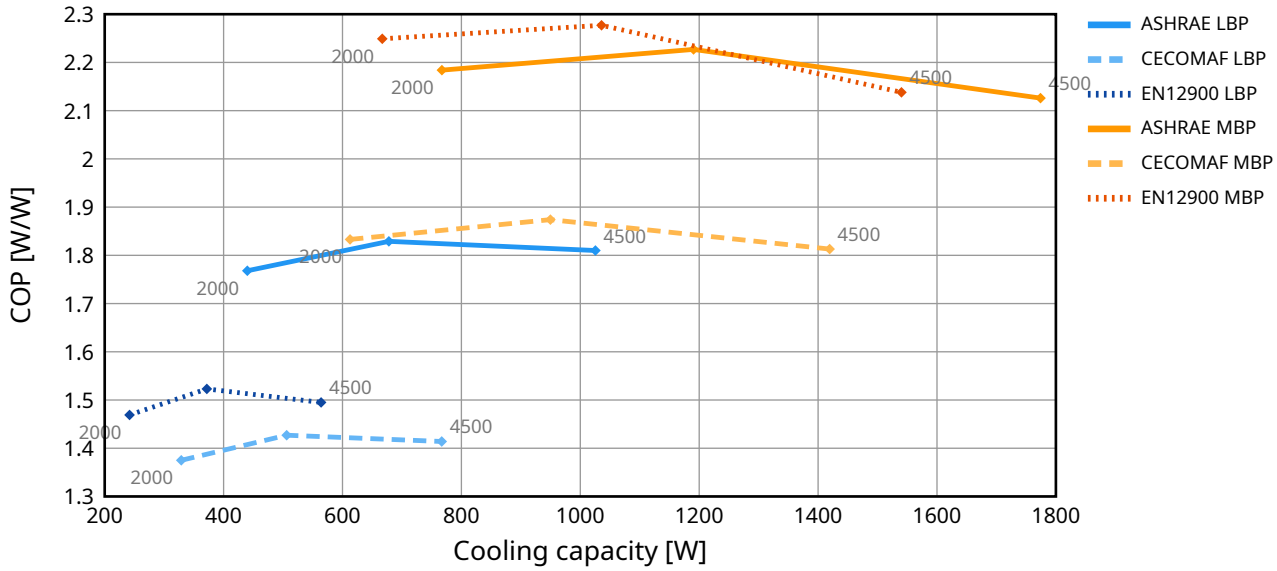

Model
MN13UVULTM

Sales code:
105M0852

Standard Conditions — 2000 rpm

R170, 240 V/50 Hz, fan 3m/s

pe	pc	RGT	Tliq	Cooling capacity			COP	EER	P	I	ṁ	
[°C] [°F]	[°C] [°F]	[°C] [°F]	[°C] [°F]	[W]	[Btu/h]	[kcal/h]	[W/W]	[Btu/Wh]	[W]	[A]	[kg/h]	
-85 -121	-35 -31	10 50	-15 5	**203**	693	175	**1.56**	5.34	130	0.66	1.65	**ULT 1**
-85 -121	-40 -40	10 50	-20 -4	**216**	737	186	**1.78**	6.07	121	0.64	1.70	**ULT 2**
-85 -121	-45 -49	10 50	-25 -13	**228**	779	196	**2.04**	6.96	112	0.61	1.74	**ULT 3**
-95 -139	-35 -31	10 50	-30 -22	**112**	382	96	**1.23**	4.18	92	0.57	0.82	**ULT 4**
-95 -139	-40 -40	10 50	-35 -31	**122**	418	105	**1.42**	4.83	86	0.55	0.88	**ULT 5**
-95 -139	-45 -49	10 50	-40 -40	**132**	452	114	**1.64**	5.58	81	0.54	0.92	**ULT 6**

Performance Tables — 2000 rpm

R170, 240 V/50 Hz, fan 3m/s

pc= -35/-31 | RGT= 10/50 | Tliq= -35/-31 | °C/°F

pe		Cooling capacity			COP	EER	P	I	ṁ
[°C]	[°F]	[W]	[Btu/h]	[kcal/h]	[W/W]	[Btu/Wh]	[W]	[A]	[kg/h]
-95	-139	**117**	400	101	**1.28**	4.37	92	0.57	0.84
-90	-130	**170**	578	146	**1.54**	5.25	110	0.61	1.22
-85	-121	**234**	799	201	**1.80**	6.16	130	0.66	1.68
-80	-112	**313**	1069	269	**2.10**	7.18	149	0.72	2.25
-75	-103	**409**	1394	351	**2.46**	8.41	166	0.77	2.94
-70	-94	**523**	1783	449	**2.92**	9.95	179	0.82	3.77
-65	-85	**657**	2241	565	**3.51**	11.97	187	0.85	4.75
-60	-76	**814**	2777	700	**4.32**	14.72	189	0.86	5.91

pc= -25/-13 | RGT= 10/50 | Tliq= -25/-13 | °C/°F

-95	-139	**95**	324	82	**0.95**	3.23	100	0.59	0.72
-90	-130	**145**	496	125	**1.20**	4.10	121	0.64	1.10
-85	-121	**207**	706	178	**1.43**	4.88	144	0.70	1.57
-80	-112	**282**	961	242	**1.66**	5.67	169	0.79	2.15
-75	-103	**372**	1269	320	**1.92**	6.54	194	0.87	2.84
-70	-94	**480**	1636	412	**2.21**	7.54	217	0.96	3.67
-65	-85	**607**	2070	522	**2.57**	8.76	236	1.04	4.66
-60	-76	**755**	2577	650	**3.01**	10.27	251	1.10	5.82

Model
MN13UVULTM

Sales code:
105M0852

Standard Conditions — 4500 rpm

R170, 240 V/50 Hz, fan 3m/s

pe	pc	RGT	Tliq	Cooling capacity			COP	EER	P	I	ṁ	
[°C] [°F]	[°C] [°F]	[°C] [°F]	[°C] [°F]	[W]	[Btu/h]	[kcal/h]	[W/W]	[Btu/Wh]	[W]	[A]	[kg/h]	
-85 -121	-35 -31	10 50	-15 5	**472**	1612	406	**1.58**	5.39	299	1.32	3.85	**ULT 1**
-85 -121	-40 -40	10 50	-20 -4	**500**	1707	430	**1.78**	6.07	281	1.25	3.94	**ULT 2**
-85 -121	-45 -49	10 50	-25 -13	**527**	1797	453	**2.03**	6.92	260	1.16	4.01	**ULT 3**
-95 -139	-35 -31	10 50	-30 -22	**262**	893	225	**1.28**	4.37	204	0.94	1.93	**ULT 4**
-95 -139	-40 -40	10 50	-35 -31	**286**	976	246	**1.45**	4.94	198	0.92	2.05	**ULT 5**
-95 -139	-45 -49	10 50	-40 -40	**309**	1053	265	**1.64**	5.61	188	0.88	2.15	**ULT 6**

Performance Tables — 4500 rpm

R170, 240 V/50 Hz, fan 3m/s

pc= -35/-31 | RGT= 10/50 | Tliq= -35/-31 | °C/°F

pe		Cooling capacity			COP	EER	P	I	ṁ
[°C]	[°F]	[W]	[Btu/h]	[kcal/h]	[W/W]	[Btu/Wh]	[W]	[A]	[kg/h]
-95	-139	**274**	935	236	**1.34**	4.58	204	0.94	1.96
-90	-130	**396**	1351	341	**1.58**	5.39	251	1.12	2.84
-85	-121	**545**	1860	469	**1.82**	6.22	299	1.32	3.91
-80	-112	**726**	2476	624	**2.08**	7.10	349	1.52	5.22
-75	-103	**943**	3217	811	**2.37**	8.07	399	1.72	6.79
-70	-94	**1201**	4098	1033	**2.68**	9.13	449	1.93	8.67
-65	-85	**1505**	5134	1294	**3.02**	10.31	498	2.13	10.89
-60	-76	**1859**	6343	1599	**3.41**	11.62	546	2.34	13.49

pc= -25/-13 | RGT= 10/50 | Tliq= -25/-13 | °C/°F

-95	-139	**220**	752	190	**1.04**	3.54	212	0.97	1.68
-90	-130	**340**	1161	293	**1.27**	4.33	268	1.19	2.59
-85	-121	**485**	1654	417	**1.48**	5.06	327	1.43	3.69
-80	-112	**658**	2247	566	**1.69**	5.78	389	1.68	5.02
-75	-103	**866**	2955	745	**1.91**	6.53	453	1.95	6.62
-70	-94	**1112**	3794	956	**2.15**	7.33	518	2.22	8.52
-65	-85	**1401**	4782	1205	**2.40**	8.19	584	2.50	10.76
-60	-76	**1739**	5932	1495	**2.67**	9.13	650	2.78	13.40

Model
MN13UVULTM

Sales code:
105M0852

Optimal Performance

R170, 240 V/50 Hz, fan 3m/s
Shows the speed (RPM) that achieves the highest COP at each standard condition.

pe	pc	RGT	Tliq	Cooling capacity			COP	EER	P	RPM	
[°C] [°F]	[°C] [°F]	[°C] [°F]	[°C] [°F]	[W]	[Btu/h]	[kcal/h]	[W/W]	[Btu/Wh]	[W]	[rpm]	
-85 -121	-35 -31	10 50	-15 5	**313**	1069	270	**1.61**	5.50	194	**3000**	**ULT 1**
-85 -121	-40 -40	10 50	-20 -4	**334**	1138	287	**1.82**	6.22	183	**3000**	**ULT 2**
-85 -121	-45 -49	10 50	-25 -13	**353**	1203	303	**2.08**	7.10	170	**3000**	**ULT 3**
-95 -139	-35 -31	10 50	-30 -22	**171**	585	147	**1.30**	4.44	132	**3000**	**ULT 4**
-95 -139	-40 -40	10 50	-35 -31	**187**	639	161	**1.48**	5.03	127	**3000**	**ULT 5**
-95 -139	-45 -49	10 50	-40 -40	**203**	693	175	**1.68**	5.72	121	**3000**	**ULT 6**

Cooling Capacity vs. COP

R170, 240 V/50 Hz, fan 3m/s

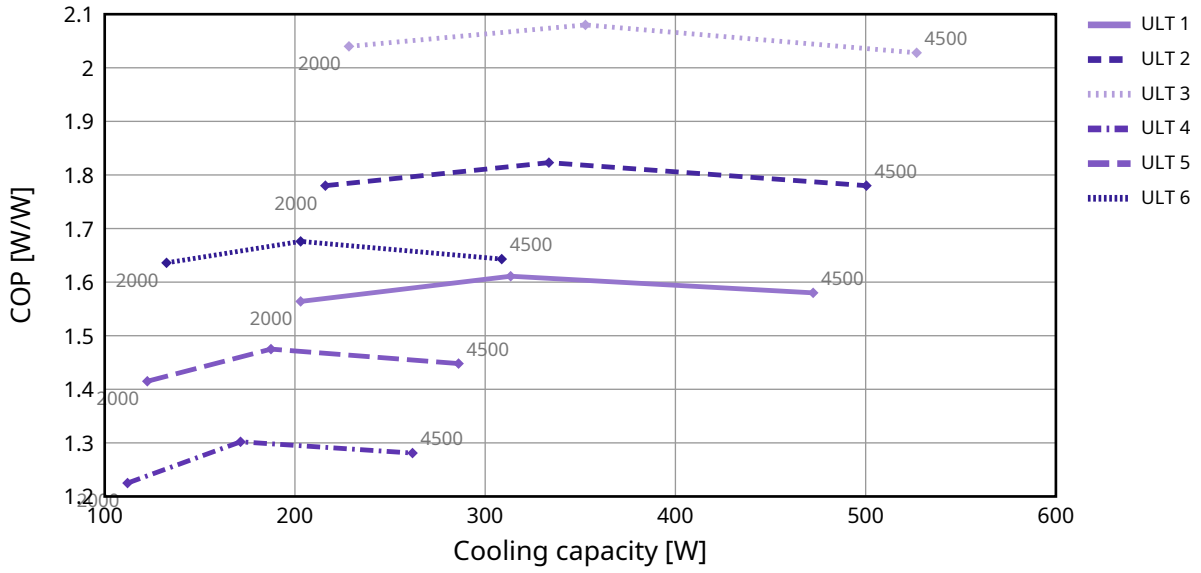

Model
MN13UVULTM

Sales code:
105M0852

Standard Conditions — 2000 rpm

R1270, 240 V/50 Hz, fan 3m/s

pe	pc	RGT	Tliq	Cooling capacity			COP	EER	P	I	ṁ	
[°C] [°F]	[°C] [°F]	[°C] [°F]	[°C] [°F]	[W]	[Btu/h]	[kcal/h]	[W/W]	[Btu/Wh]	[W]	[A]	[kg/h]	
-23.3 -10	54.4 129.9	32.2 90	32.2 90	**521**	1778	448	**1.63**	5.58	319	1.39	5.26	**ASHRAE LBP**
-25 -13	55 131	32 89.6	55 131	**392**	1338	337	**1.28**	4.35	307	1.34	4.86	**CECOMAF LBP**
-35 -31	40 104	20 68	40 104	**293**	1001	252	**1.40**	4.77	210	0.94	3.32	**EN12900 LBP**
-23.3 -10	48.8 119.8	4.4 39.9	48.8 119.8	**426**	1455	367	**1.40**	4.78	304	1.33	5.78	**ARI540 LBP**
-23.3 -10	40.6 105.1	32.2 90	32.2 90	**548**	1868	471	**1.94**	6.62	282	1.23	5.52	**AHAM LBP**
-35 -31	45 113	32 89.6	45 113	**281**	959	242	**1.29**	4.41	217	0.97	3.13	**opt LBP**

Performance Tables — 2000 rpm

R1270, 240 V/50 Hz, fan 3m/s

pc= 35/95 | RGT= 32/89.6 | Tliq= 35/95 | °C/°F

pe		Cooling capacity			COP	EER	P	I	ṁ
[°C]	[°F]	[W]	[Btu/h]	[kcal/h]	[W/W]	[Btu/Wh]	[W]	[A]	[kg/h]
-50	-58	**136**	464	117	**1.04**	3.56	130	0.67	1.38
-40	-40	**248**	848	214	**1.41**	4.82	176	0.81	2.54
-30	-22	**407**	1388	350	**1.77**	6.04	230	1.01	4.18
-20	-4	**622**	2121	535	**2.20**	7.52	282	1.23	6.43
-10	14	**904**	3083	777	**2.81**	9.60	321	1.40	9.44
0	32	**1263**	4309	1086	**3.76**	12.83	336	1.46	13.36
3	37	**1387**	4734	1193	**4.16**	14.18	334	1.44	14.75

pc= 45/113 | RGT= 32/89.6 | Tliq= 45/113 | °C/°F

-50	-58	**110**	374	94	**0.78**	2.64	141	0.69	1.21
-40	-40	**214**	731	184	**1.14**	3.89	188	0.85	2.38
-30	-22	**360**	1227	309	**1.44**	4.91	250	1.10	4.02
-20	-4	**556**	1898	478	**1.76**	6.00	316	1.38	6.27
-10	14	**815**	2780	701	**2.17**	7.39	376	1.63	9.28
0	32	**1146**	3910	985	**2.74**	9.34	419	1.79	13.23
3	37	**1261**	4303	1084	**2.96**	10.09	427	1.82	14.64

Model
MN13UVULTM

Sales code:
105M0852

Standard Conditions — 4500 rpm

R1270, 240 V/50 Hz, fan 3m/s

pe	pc	RGT	Tliq	Cooling capacity			COP	EER	P	I	ṁ	
[°C] [°F]	[°C] [°F]	[°C] [°F]	[°C] [°F]	[W]	[Btu/h]	[kcal/h]	[W/W]	[Btu/Wh]	[W]	[A]	[kg/h]	
-23.3 -10	54.4 129.9	32.2 90	32.2 90	**1214**	4144	1044	**1.67**	5.70	726	3.10	12.25	**ASHRAE LBP**
-25 -13	55 131	32 89.6	55 131	**914**	3120	786	**1.31**	4.47	698	2.98	11.33	**CECOMAF LBP**
-35 -31	40 104	20 68	40 104	**684**	2333	588	**1.41**	4.80	486	2.08	7.73	**EN12900 LBP**
-23.3 -10	48.8 119.8	4.4 39.9	48.8 119.8	**992**	3385	853	**1.42**	4.83	700	2.98	13.44	**ARI540 LBP**
-23.3 -10	40.6 105.1	32.2 90	32.2 90	**1271**	4337	1093	**1.93**	6.58	659	2.81	12.82	**AHAM LBP**
-35 -31	45 113	32 89.6	45 113	**656**	2237	564	**1.31**	4.48	500	2.14	7.31	**opt LBP**

Performance Tables — 4500 rpm

R1270, 240 V/50 Hz, fan 3m/s

pc= 35/95 | RGT= 32/89.6 | Tliq= 35/95 | °C/°F

pe		Cooling capacity			COP	EER	P	I	ṁ
[°C]	[°F]	[W]	[Btu/h]	[kcal/h]	[W/W]	[Btu/Wh]	[W]	[A]	[kg/h]
-50	-58	**315**	1074	271	**1.09**	3.74	288	1.27	3.21
-40	-40	**579**	1977	498	**1.43**	4.87	406	1.76	5.92
-30	-22	**946**	3228	814	**1.77**	6.03	535	2.29	9.72
-20	-4	**1439**	4910	1238	**2.14**	7.30	673	2.87	14.89
-10	14	**2082**	7104	1791	**2.54**	8.68	818	3.49	21.75
0	32	**2899**	9891	2493	**2.99**	10.19	971	4.12	30.68
3	37	**3182**	10855	2736	**3.13**	10.67	1017	4.32	33.83

pc= 45/113 | RGT= 32/89.6 | Tliq= 45/113 | °C/°F

-50	-58	**252**	859	217	**0.86**	2.93	293	1.30	2.79
-40	-40	**499**	1704	429	**1.17**	3.99	427	1.84	5.55
-30	-22	**838**	2858	720	**1.46**	4.97	575	2.46	9.37
-20	-4	**1291**	4404	1110	**1.75**	5.98	736	3.14	14.54
-10	14	**1882**	6423	1619	**2.07**	7.07	909	3.87	21.44
0	32	**2637**	8997	2268	**2.41**	8.24	1092	4.64	30.45
3	37	**2898**	9889	2493	**2.52**	8.61	1149	4.88	33.65

Model
MN13UVULTM

Sales code:
105M0852

Optimal Performance

R1270, 240 V/50 Hz, fan 3m/s
Shows the speed (RPM) that achieves the highest COP at each standard condition.

pe	pc	RGT	Tliq	Cooling capacity			COP	EER	P	RPM	
[°C] [°F]	[°C] [°F]	[°C] [°F]	[°C] [°F]	[W]	[Btu/h]	[kcal/h]	[W/W]	[Btu/Wh]	[W]	[rpm]	
-23.3 -10	54.4 129.9	32.2 90	32.2 90	**804**	2745	692	**1.69**	5.75	477	**3000**	**ASHRAE LBP**
-25 -13	55 131	32 89.6	55 131	**605**	2063	520	**1.32**	4.50	458	**3000**	**CECOMAF LBP**
-35 -31	40 104	20 68	40 104	**452**	1542	389	**1.43**	4.89	315	**3000**	**EN12900 LBP**
-23.3 -10	48.8 119.8	4.4 39.9	48.8 119.8	**659**	2249	567	**1.44**	4.90	459	**3000**	**ARI540 LBP**
-23.3 -10	40.6 105.1	32.2 90	32.2 90	**848**	2895	730	**1.98**	6.76	428	**3000**	**AHAM LBP**
-35 -31	45 113	32 89.6	45 113	**432**	1475	372	**1.34**	4.56	324	**3000**	**opt LBP**

Cooling Capacity vs. COP

R1270, 240 V/50 Hz, fan 3m/s

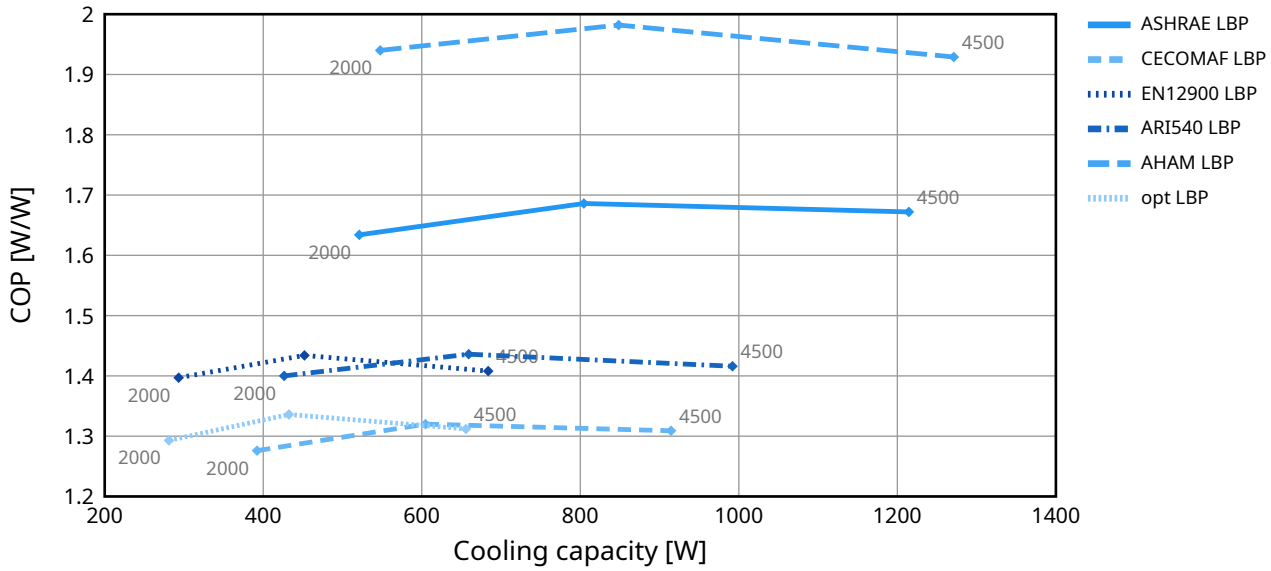

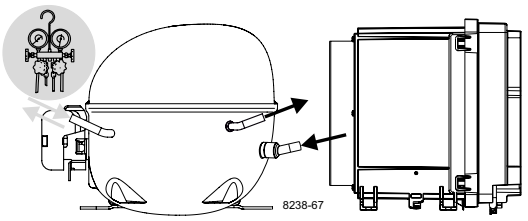

Instructions

NLV/MN-UV Compressors
100-240 V, 50/60 Hz
105N4960/105N4964
Controllers

SECOP

Keep electrical equipment clear from oil, chemicals, and water



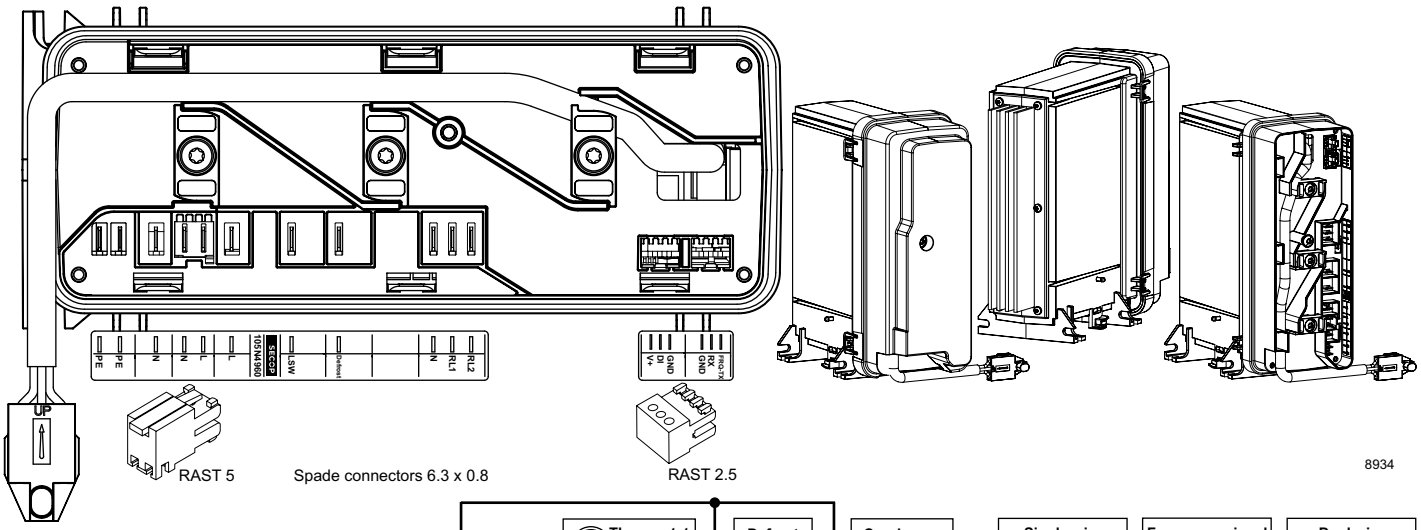

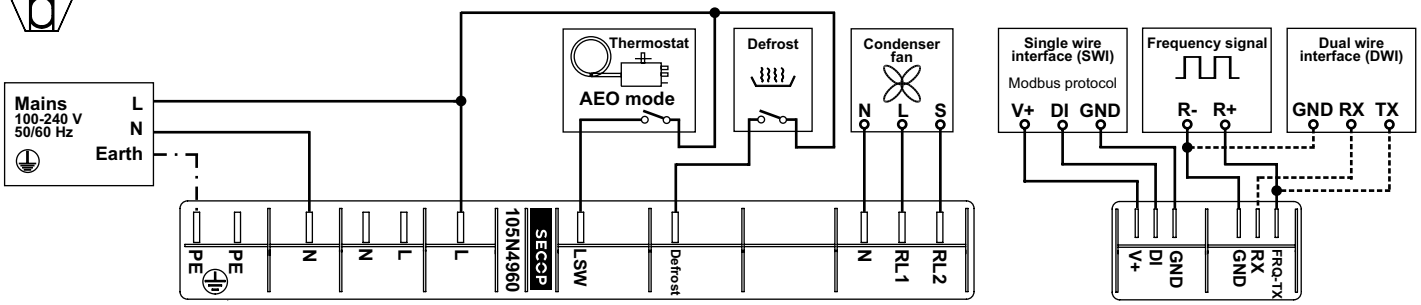

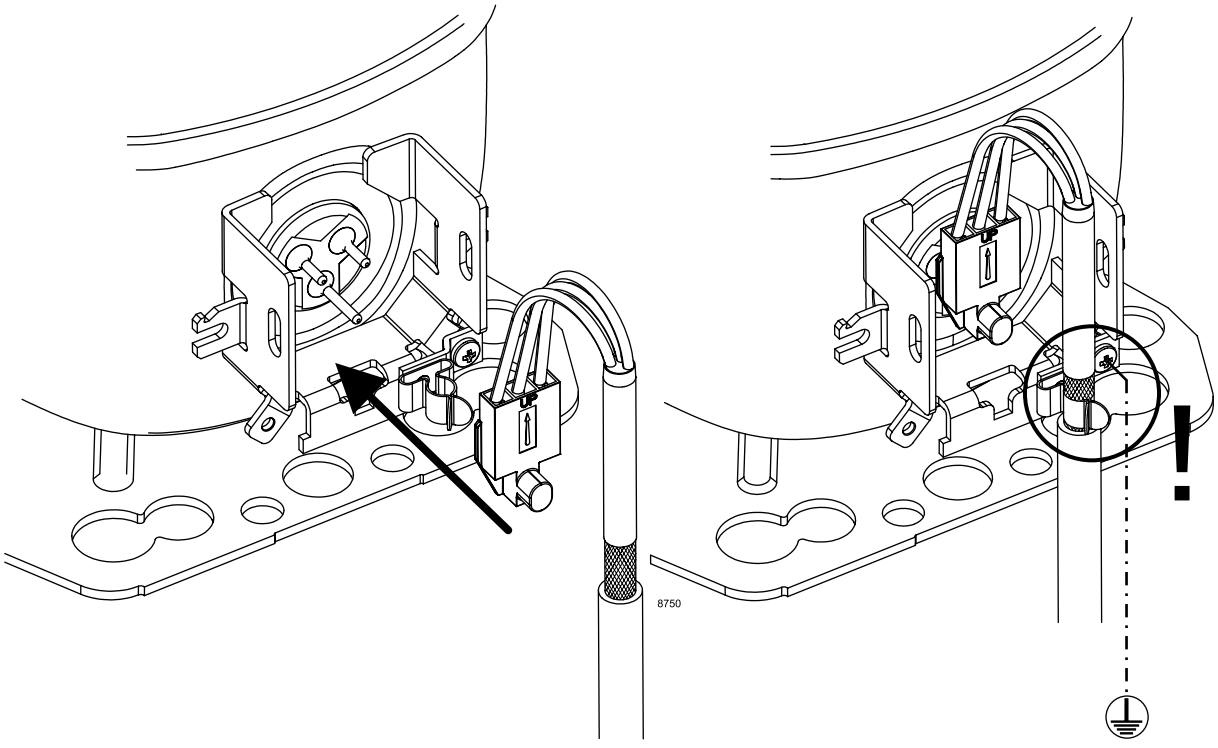

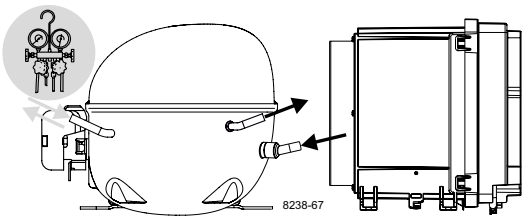

Instructions

NLV/MN-UV Compressors
100-240 V, 50/60 Hz
105N4960/105N4964
Controllers

SECOP

Keep electrical equipment clear from oil, chemicals, and water



Service/Repair – R170, R290, R1270

(applies to all flammable refrigerants)



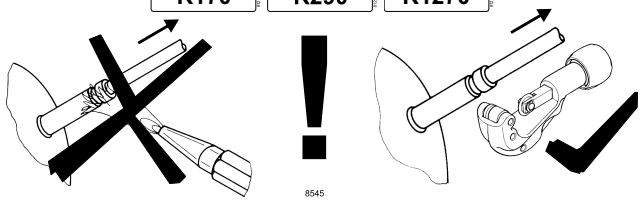

Brazing on Suction Connectors (Direct Intake)

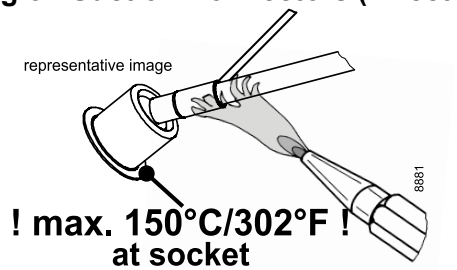

! max. 150°C/302°F ! at socket

brazing solder: phosphor (LP7) or silver

Refer to Product Bulletin: **Brazing on Suction Connectors (Compressors with Direct Suction Intake)**

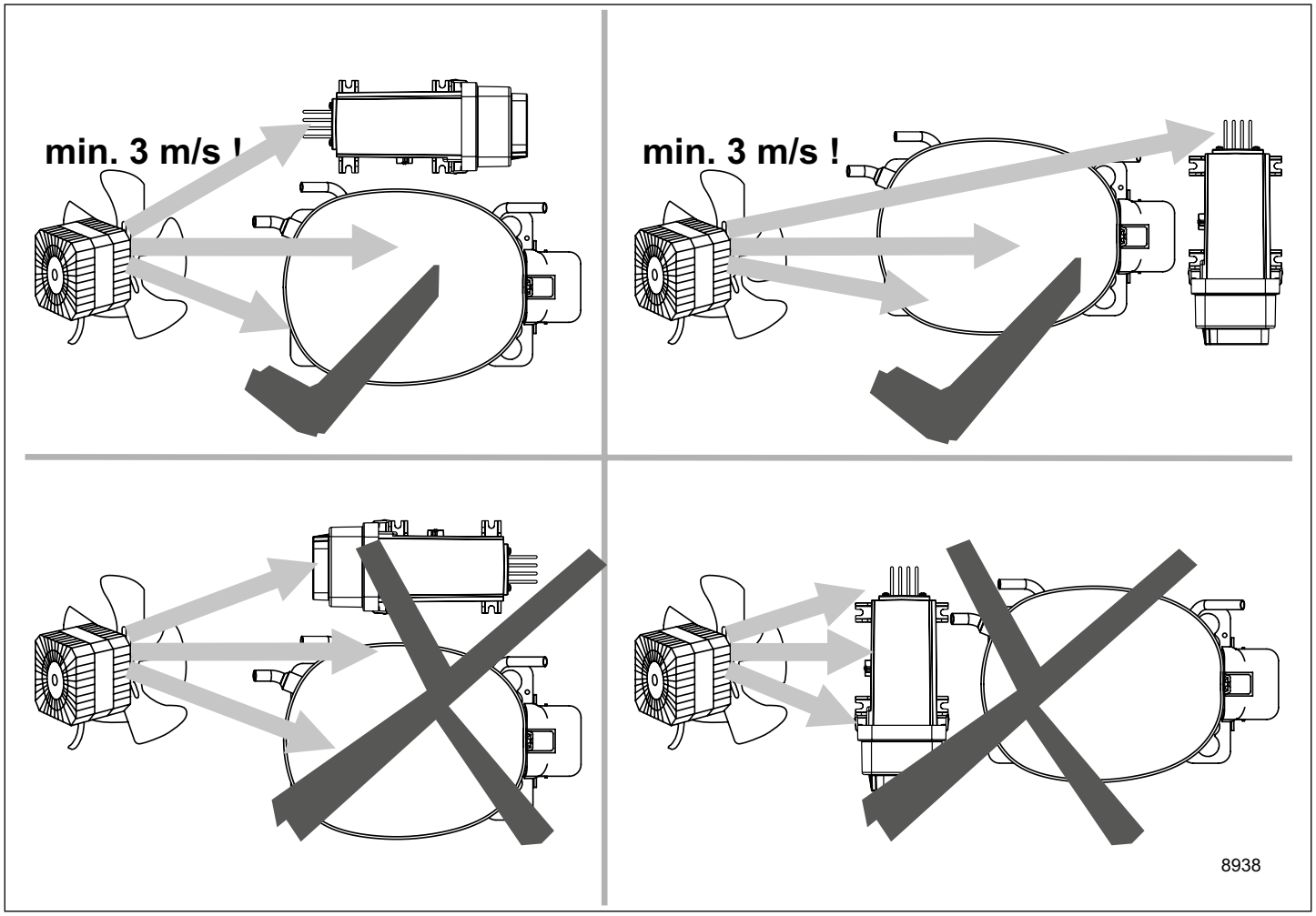

Airflow	3 m/s
Operating conditions	+ 5 °C to 43 °C - humidity < 90 % rH non condensing
Storage conditions	-25 °C to 70 °C - humidity < 90 % rH non condensing
Supply voltage	100-240 V (± 10 %)
Frequency	50/60 Hz
Input power, max.	1000 W

Dismantling, recycling, disposal: At the end of a compressor's lifecycle, proceed by separating and storing components according to their environmental impact. Parts that may cause pollution must be clearly identified and handled separately, ensuring appropriate disposal. Refrigerant gas must not be released into the environment and should be recovered by qualified operators. Compressor oil must also be collected separately. The compressor should be disposed of at specialized disposal centers in accordance with the applicable regulations. **Subject to modifications/alterations. www.secop.com**

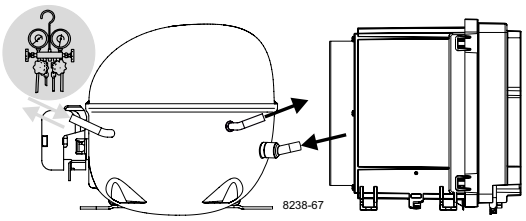

Instructions

NLV/MN-UV Compressors
100-240 V, 50/60 Hz
105N4962/105N4966/
105N4972 Controllers

SECOP

Keep electrical equipment clear from oil, chemicals, and water



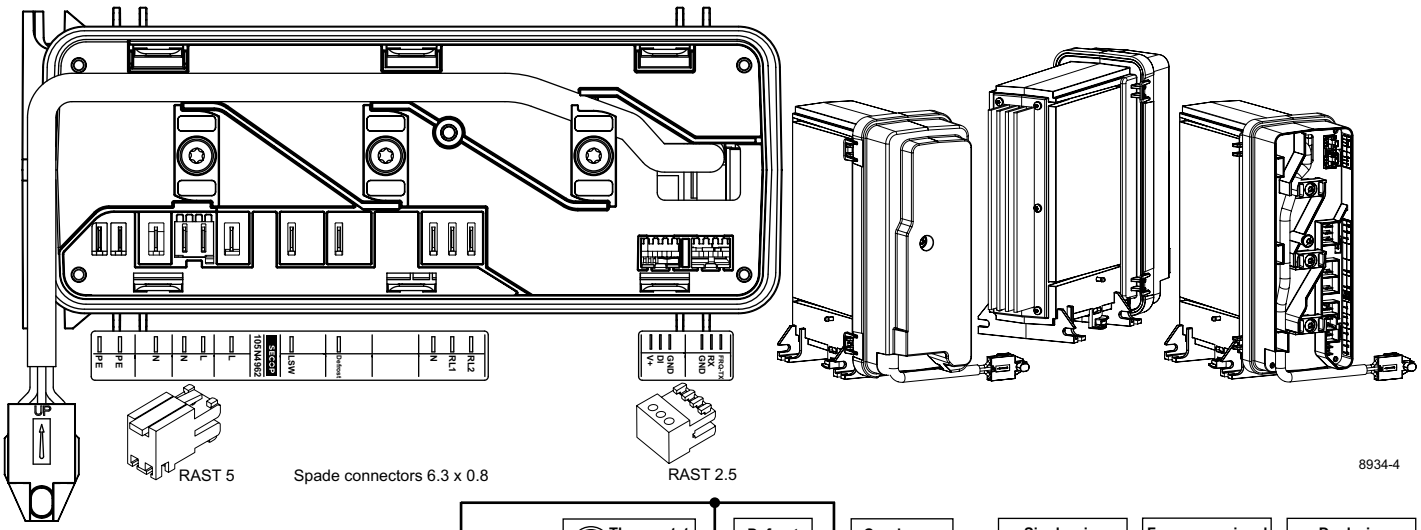

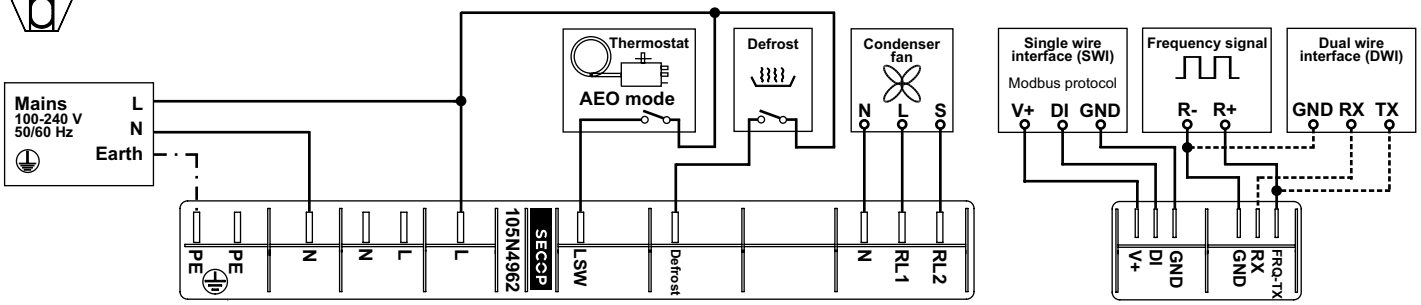

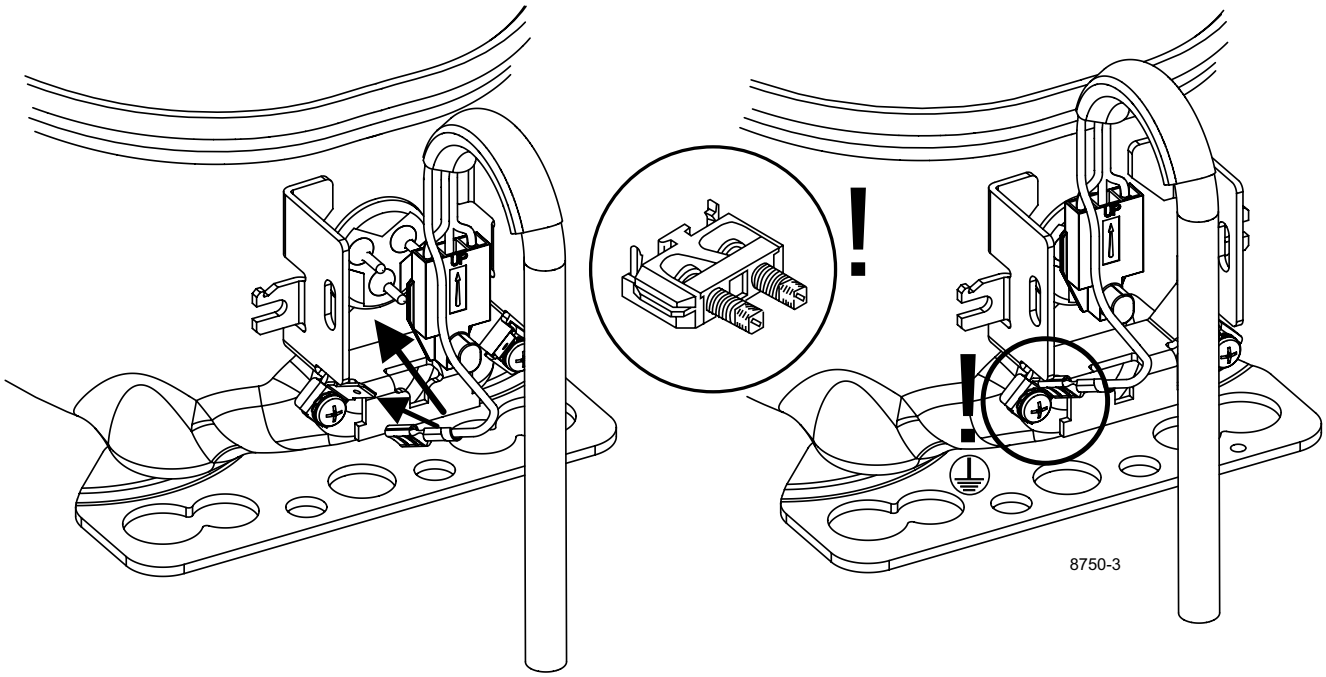

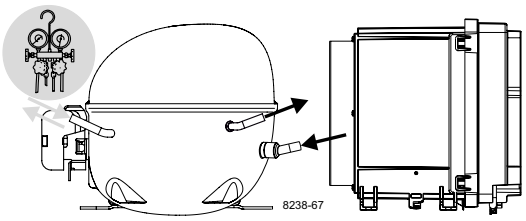

Instructions

NLV/MN-UV Compressors
100-240 V, 50/60 Hz
105N4962/105N4966/
105N4972 Controllers

SECOP

Keep electrical equipment clear from oil, chemicals, and water



Service/Repair – R170, R290, R1270

(applies to all flammable refrigerants)



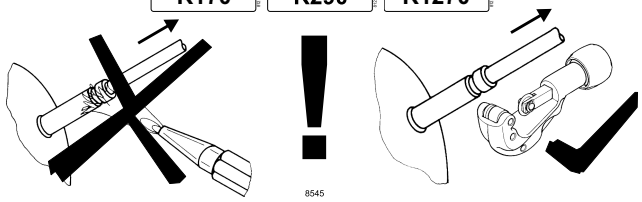

Brazing on Suction Connectors (Direct Intake)

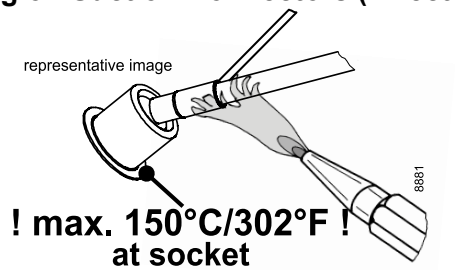

! max. 150°C/302°F ! at socket

brazing solder: phosphor (LP7) or silver

Refer to Product Bulletin: **Brazing on Suction Connectors (Compressors with Direct Suction Intake)**

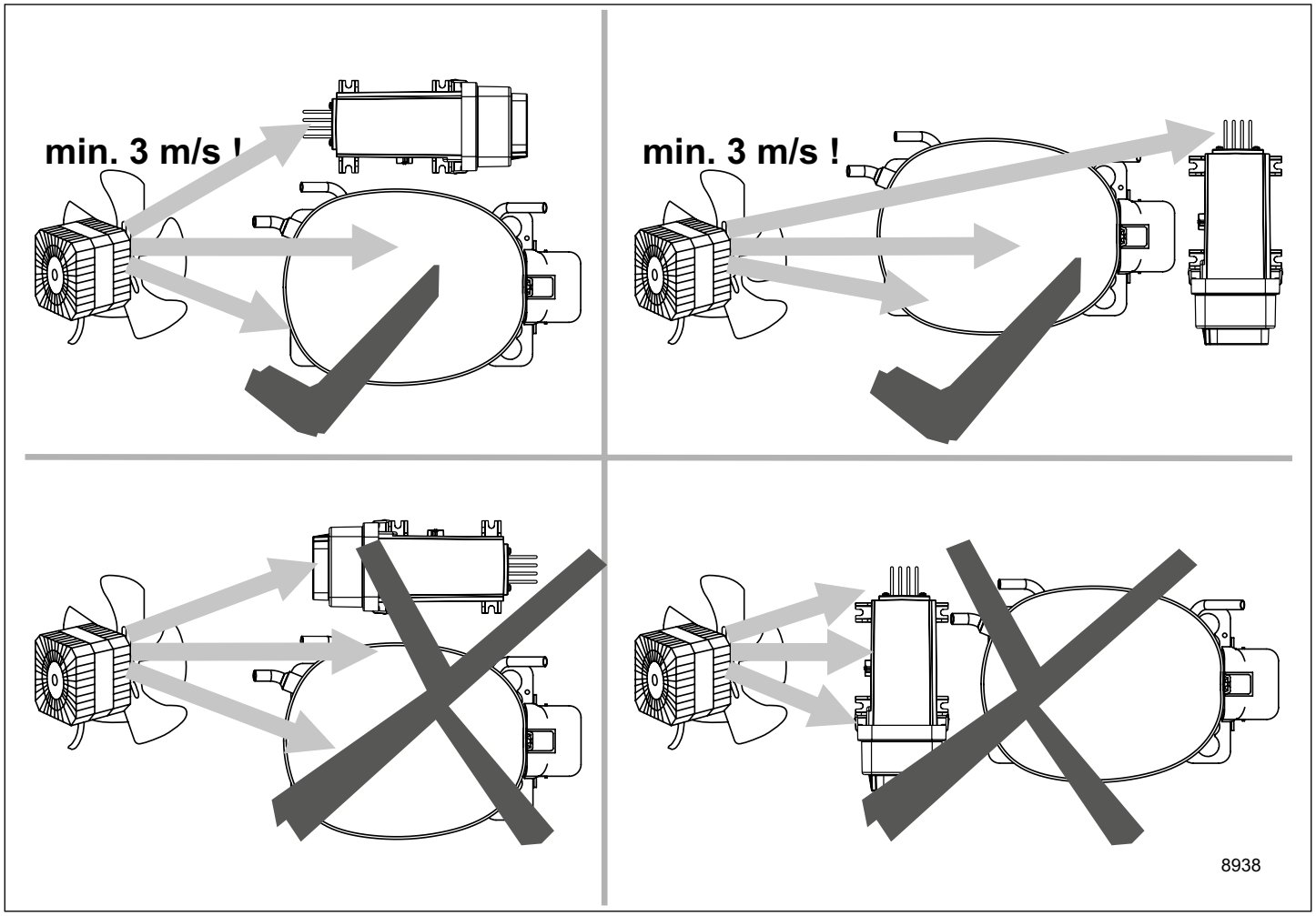

Airflow	3 m/s
Operating conditions	+ 5 °C to 43 °C - humidity < 90 % rH non condensing
Storage conditions	-25 °C to 70 °C - humidity < 90 % rH non condensing
Supply voltage	100-240 V (± 10 %)
Frequency	50/60 Hz
Input power, max.	1000 W

Dismantling, recycling, disposal: At the end of a compressor's lifecycle, proceed by separating and storing components according to their environmental impact. Parts that may cause pollution must be clearly identified and handled separately, ensuring appropriate disposal. Refrigerant gas must not be released into the environment and should be recovered by qualified operators. Compressor oil must also be collected separately. The compressor should be disposed of at specialized disposal centers in accordance with the applicable regulations. **Subject to modifications/alterations. www.secop.com**

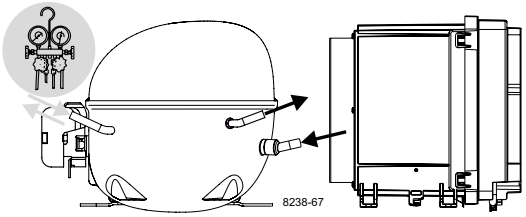

Instructions

NLV/MN-UV Compressors
220-240 V, 50/60 Hz
105N491x Series
Controllers

SECOP

Keep electrical equipment clear from oil, chemicals, and water



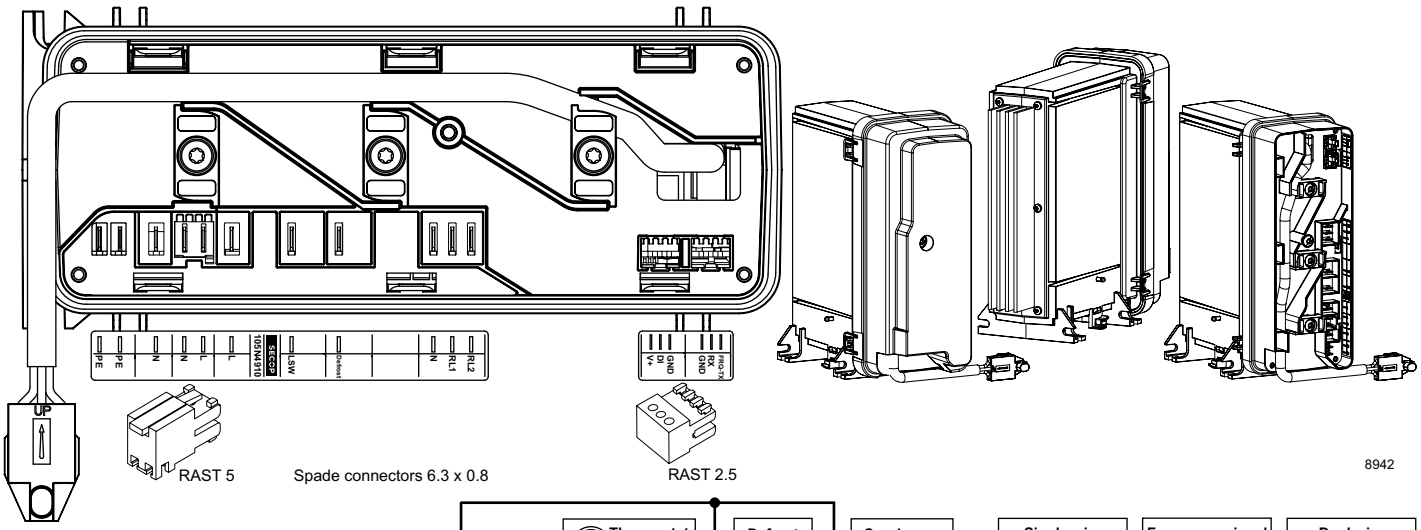

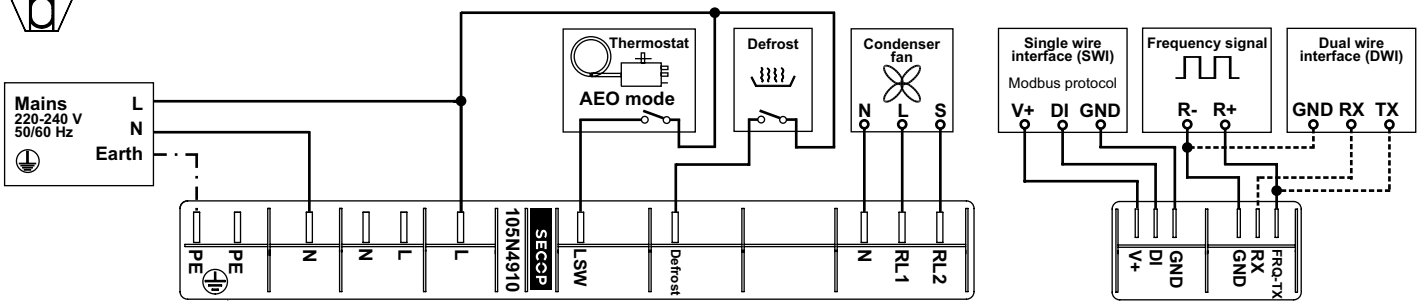

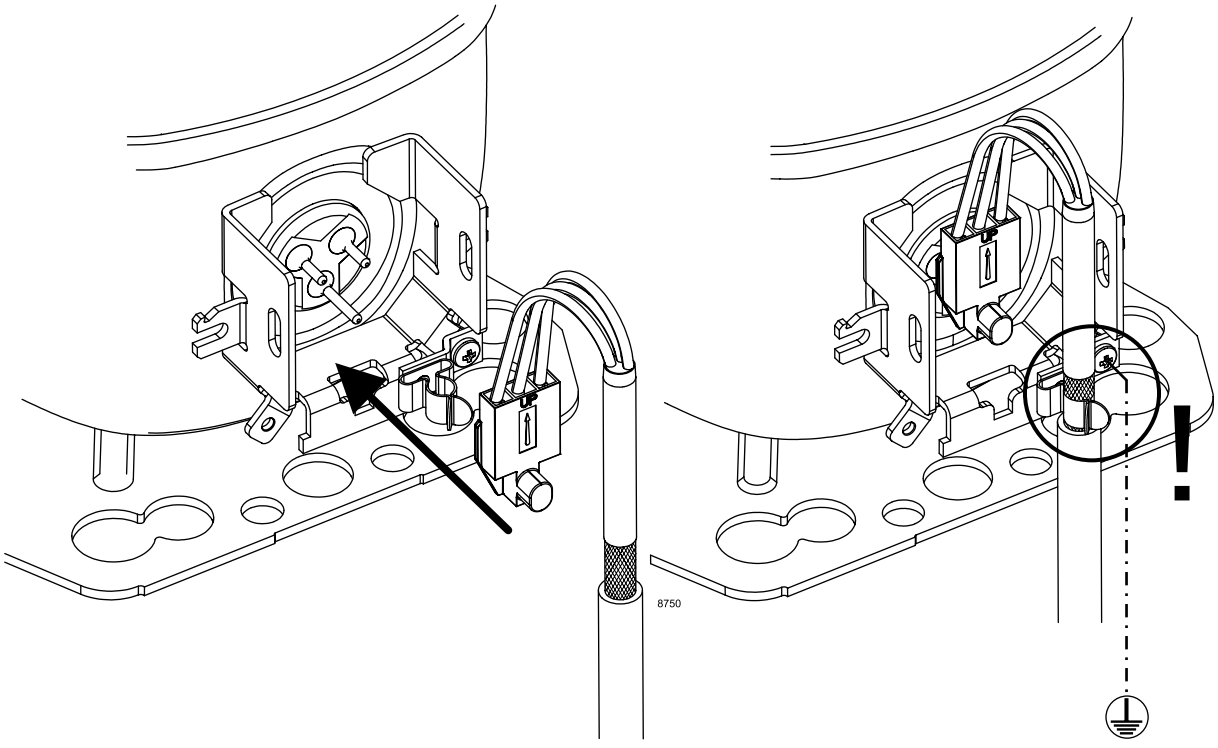

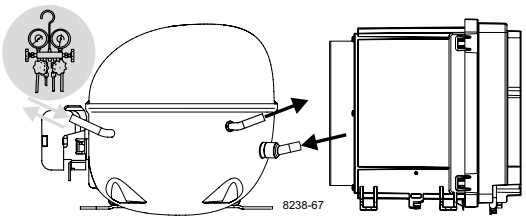

Instructions

NLV/MN-UV Compressors
220-240 V, 50/60 Hz
105N491x Series
Controllers

SECOP

Keep electrical equipment clear from oil, chemicals, and water



Service/Repair – R170, R290, R1270

(applies to all flammable refrigerants)



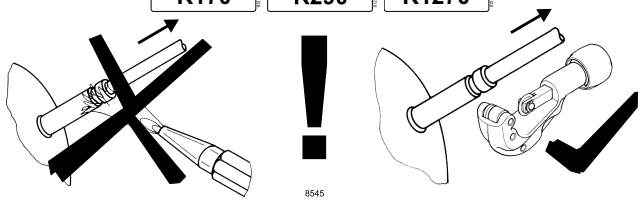

Brazing on Suction Connectors (Direct Intake)

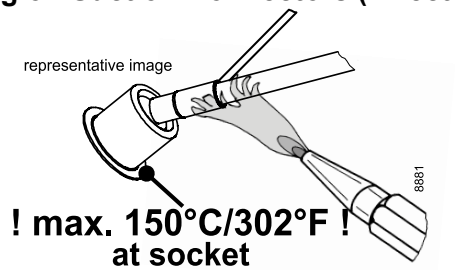

! max. 150°C/302°F ! at socket

brazing solder: phosphor (LP7) or silver

Refer to Product Bulletin: **Brazing on Suction Connectors (Compressors with Direct Suction Intake)**

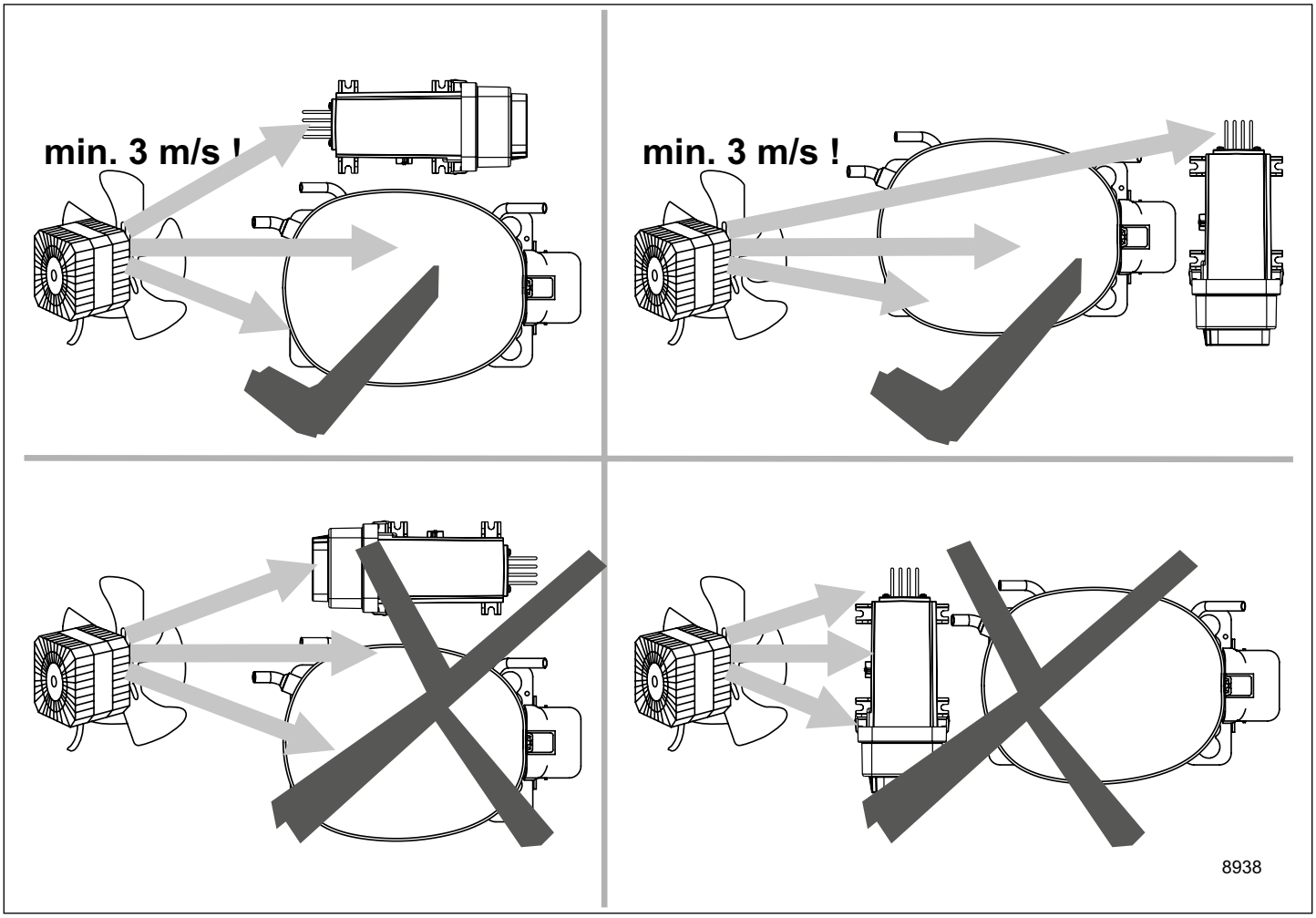

Airflow	3 m/s
Operating conditions	+ 5 °C to 43 °C - humidity < 90 % rH non condensing
Storage conditions	-25 °C to 70 °C - humidity < 90 % rH non condensing
Supply voltage	220-240 V (± 10 %)
Frequency	50/60 Hz
Input power, max.	1000 W

Dismantling, recycling, disposal: At the end of a compressor's lifecycle, proceed by separating and storing components according to their environmental impact. Parts that may cause pollution must be clearly identified and handled separately, ensuring appropriate disposal. Refrigerant gas must not be released into the environment and should be recovered by qualified operators. Compressor oil must also be collected separately. The compressor should be disposed of at specialized disposal centers in accordance with the applicable regulations. **Subject to modifications/alterations. www.secop.com**

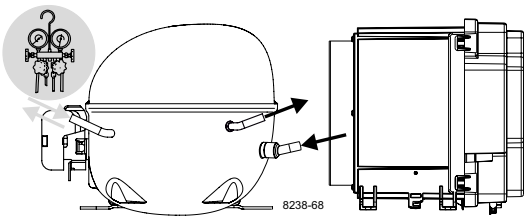

Instructions

NLV Compressors
100-240 V, 50/60 Hz
105N486x Series
Controllers

SECOP

Keep electrical equipment clear from oil, chemicals, and water



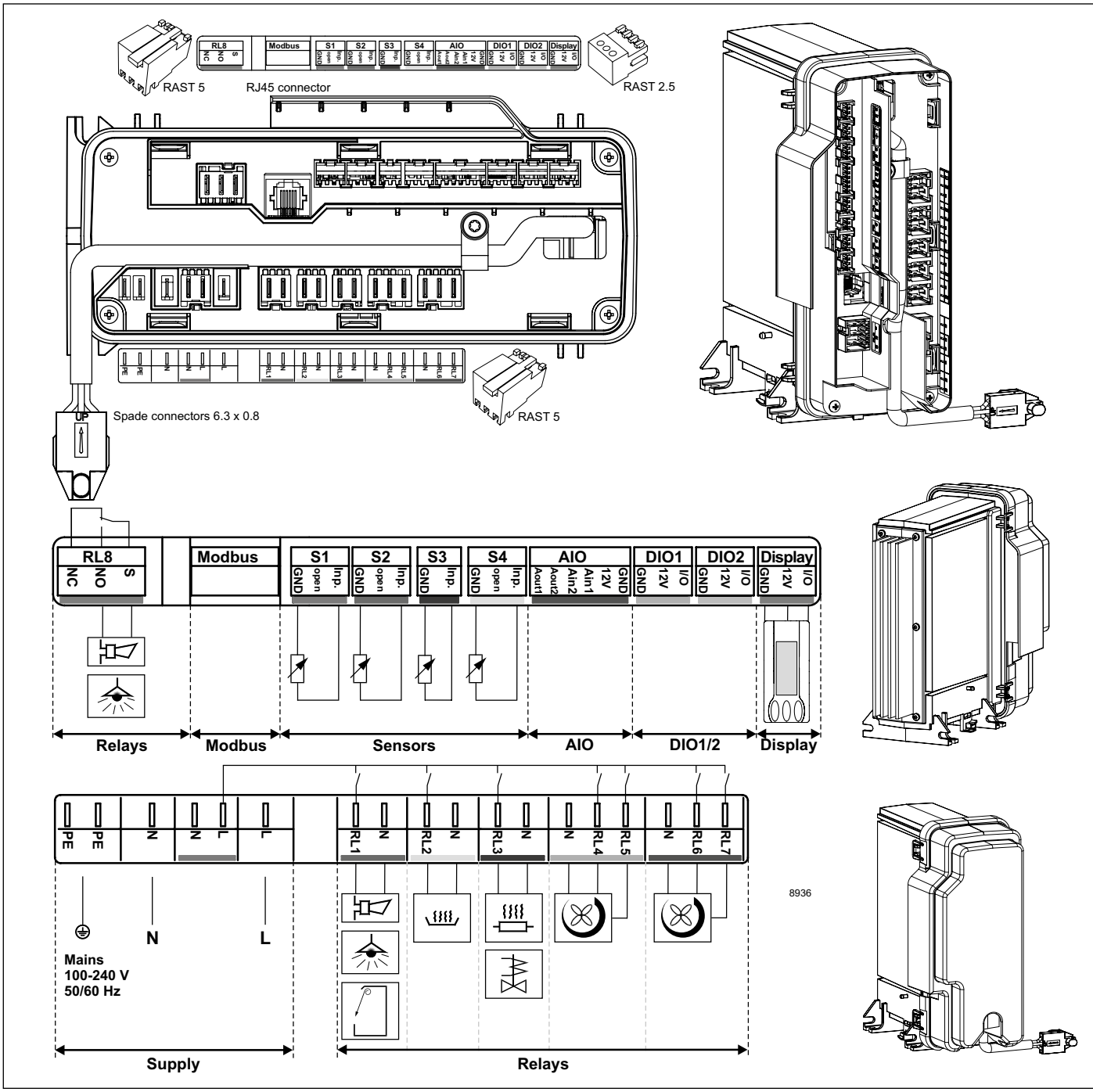

Mains	red	**S1**	red
RL 1	blue	**S2**	blue
RL 2	yellow	**S3**	black
RL 3	black	**S4**	yellow
RL 4, 5	grey	**AIO**	brown
RL 6, 7	brown	**DIO1**	grey
RL 8	green	**DIO2**	pink
		Display	green

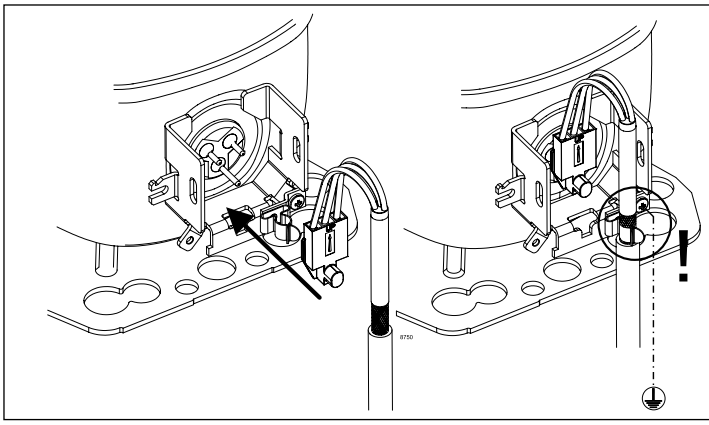

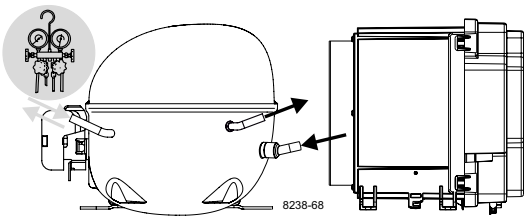

Instructions

NLV Compressors
100-240 V, 50/60 Hz
105N486x Series
Controllers

SECOP

Keep electrical equipment clear from oil, chemicals, and water



Service/Repair – R170, R290, R1270

(applies to all flammable refrigerants)



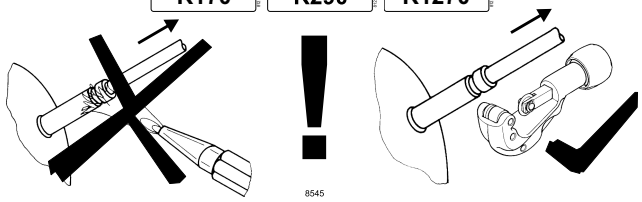

Brazing on Suction Connectors (Direct Intake)

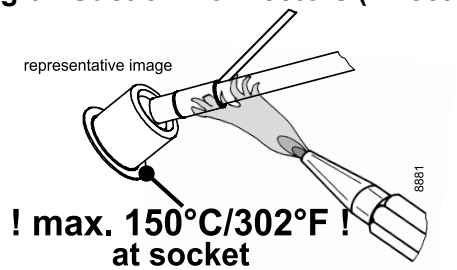

! max. 150°C/302°F ! at socket

brazing solder: phosphor (LP7) or silver

Refer to Product Bulletin: **Brazing on Suction Connectors (Compressors with Direct Suction Intake)**

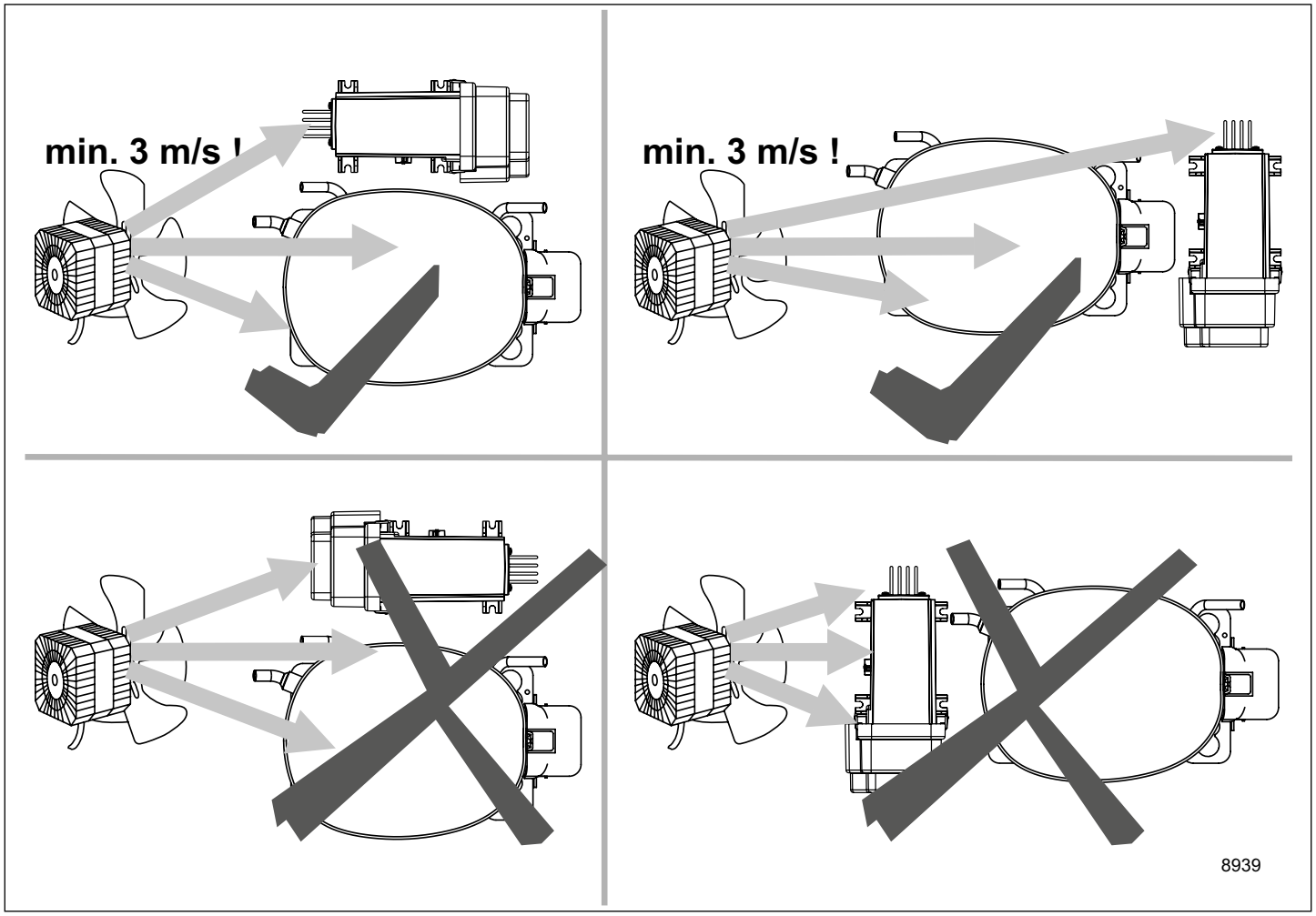

Airflow	3 m/s
Operating conditions	+ 5 °C to 43 °C - humidity < 90 % rH non condensing
Storage conditions	-25 °C to 70 °C - humidity < 90 % rH non condensing
Supply voltage	100-240 V (± 10 %)
Frequency	50/60 Hz
Input power, max.	1000 W

Dismantling, recycling, disposal: At the end of a compressor's lifecycle, proceed by separating and storing components according to their environmental impact. Parts that may cause pollution must be clearly identified and handled separately, ensuring appropriate disposal. Refrigerant gas must not be released into the environment and should be recovered by qualified operators. Compressor oil must also be collected separately. The compressor should be disposed of at specialized disposal centers in accordance with the applicable regulations. **Subject to modifications/alterations. www.secop.com**