Single
Packs

SECOP

Single Pack KLF6.6GFHX 115-127V 60Hz CSIR

Single pack code number: **195B4854**

Position	Title	Code	Amount
1	Compressor KLF6.6GFHX	106G6712	1
2	Bolt joint for one compressor | M6 | ø16mm	118-1917	1
Below electrical equipment is pre-assembled on the compressor:			
3	Starting relay (QLZ-11.6A, overload protector T1246/L6)	117U7080	1
4	Starting capacitor (240µF 125V, 6.3mm)	117U5002	1
5	Cable clamp	16058100	1
6	Screw for cable clamp	10636000	1
7	Screw for cable clamp	10636200	1
8	Cover	10636401	1
9	Earth screw	10641201	1

Secop GmbH • Lise-Meitner-Straße 29 • 24941 Flensburg, Germany • Tel: +49 461 4941 0 • **www.secop.com**

Secop accepts no responsibility for possible errors in catalogs, brochures, and other printed material. Secop reserves the right to alter its products without notice. This also applies to products already on order provided that such alterations can be made without subsequential changes being necessary to specifications already agreed. All trademarks in this material are the property of the respective companies. Secop and the Secop logotype are trademarks of Secop GmbH. All rights reserved.

Model
KLF6.6GFHX

Sales code:
106G6712

Compressor Data

Refrigerant(s)	**R134a / R513A**
Refr. charge - tech. limit	**300g / 10.58oz**
Weight	**9.20 kg / 20.28lbs**
Displacement	**6.60 cm3 / 0.40cu.in**
Compressors on pallet	**100**



General – Configurations With KLF6.6GFHX

–	**Conf. 1**
Motor configuration	CSIR
Power supply (nominal)	115-120 V/60 Hz
Number of phases	1
Voltage range	103-135 V
Approvals	UL
Starting torque	HST
Refrigerant	R134a
Application	LBP+MBP+HBP
Hot gas defrost	OK
Long interval pull down	OK

Application Notes

- Electrical equipment is included and pre-assembled to compressor.
- Provision for PE Grounding is located at the PE Stamp on the compressor

Model
KLF6.6GFHX

Sales code:
106G6712

Compressor Design

Oil type	**POE**	Winding resistance main	**2 Ohm**
Oil viscosity	**9,7cSt**	Winding resistance aux	**8.5 Ohm**
Oil quantity	**173 cm3 / 5.85fl.oz**	Max. winding temp.	**125 °C**
Free gas volume comp.	**1,580 cm3 / 53.43fl.oz**	Max. discharge temp.	**130°C / 266°F**
Motor protection	**external**		

Compressor Dimensions

Housing

A Height	**182mm / 7.17in**
B Height	**175mm / 6.89in**
C Length shell	**198mm / 7.80in**
D Length w. cover	**238mm / 9.37in**
E Width	**160mm / 6.30in**

Find 3D Model here

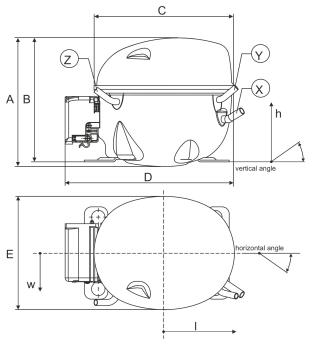

Connectors	Suction X	Discharge Y	Process Z
Diameter [mm]	øi 8.11–8.29 / 0.32–0.33in	øi 6.41–6.59 / 0.25–0.26in	øi 6.41–6.59 / 0.25–0.26in
Material	CU	CU	CU
Horizontal angle ±2°	35°	13°	0°
Vertical angle ±2°	30°	40°	145°
Position l/h/w [mm]	119/73/59 / 4.69/2.87/2.32in	117/107/66 / 4.61/4.21/2.60in	-88/101/71 / -3.46/3.98/2.80in
Straight tube l. [mm]	13.5 / 0.53in	13.5 / 0.53in	13.5 / 0.53in

Mounting Accessories

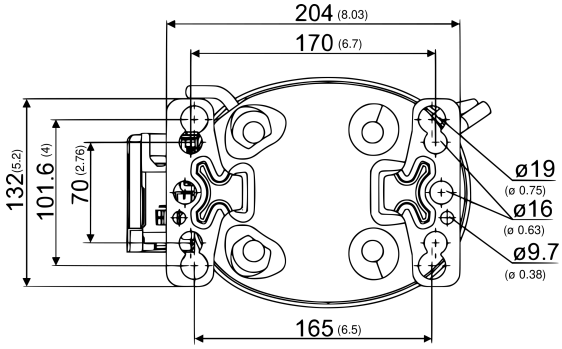

Dimensions in mm [in]

Bolt joint

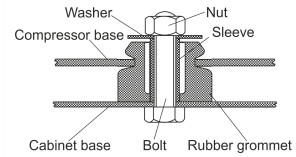

Snap-on

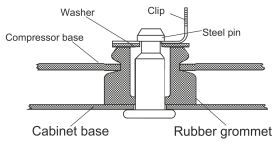

	one comp.	multi pack
Bolt joint | M6 | ø16mm	118-1917	118-1918
Bolt joint | ø1/4" | ø16mm	118-1946	–
Bolt joint | ø1/4" | ø19mm	118-1949	–
Snap-on | ø7,3 | ø16mm	118-1947	118-1919

Model
KLF6.6GFHX Configuration 1

Sales code:
106G6712

Configuration

Motor configuration	**CSIR**
Power supply (nominal)	**115-120 V/60 Hz 1~**
Refrigerant	**R134a**
Application	**LBP+MBP+HBP**
Voltage range	**103-135 V**
Starting torque	**HST**
Approvals	**UL**
Starting device type	**relay**
Run capacitor	**-/-**
Start capacitor	**240 µF**
LRA (locked rotor amps / 4s/ U(N))	**29.6 A**
RLA (rated load amps / 1s/ U(N))	**4.3 A**
Cut in current (U(N))	**27.5 A**

Ambient/ machine room temperatures minimum /maximum
Ambient temperature range: 10 - 43°C / 50 - 109°F
Machine room temp. compressor: 10 - 48°C / 50 - 118°F

System Cooling
fan 3m/s

Electrical Accessories / Wiring Diagram

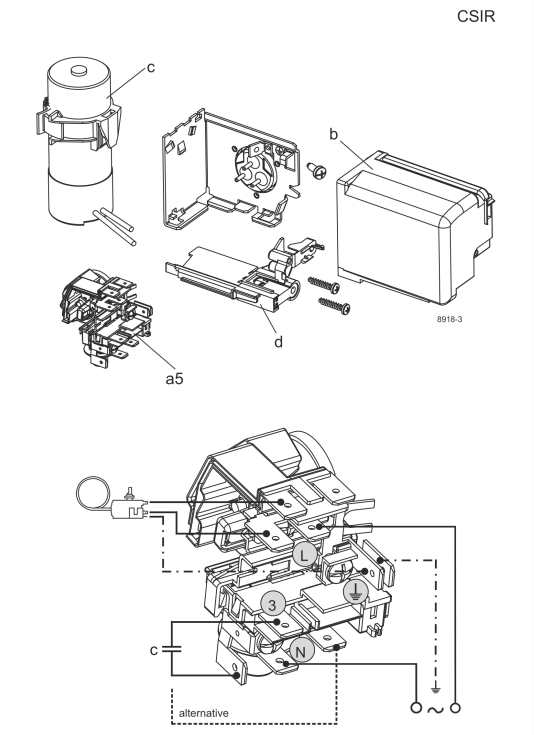

View full size

Components (already pre-assembled)
a5 current relay (T1246/L6) 117U7080
c start capacitor (240µF) 117U5002
b, d cover + clamp + screws (5VA-compl.) 103N0600

Alternative components
b, d 100x cover + clamp + screws (5VA) 103N2060
b, d cover + clamp + screws (5VA) in bag 103N1060

Operation Pressure Range

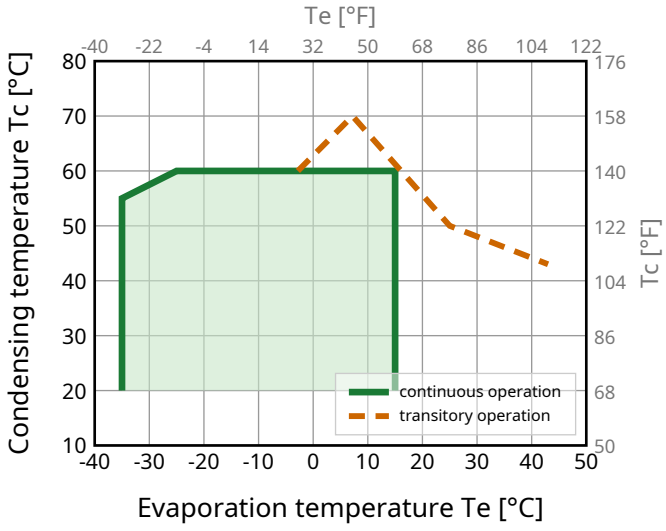

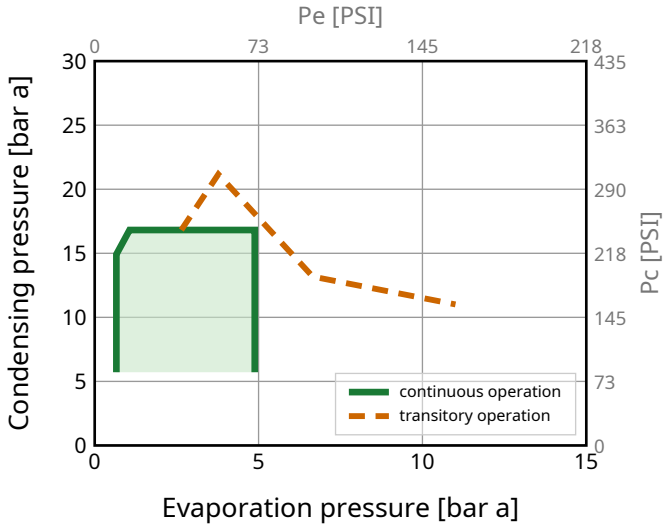

Model Sales code:

KLF6.6GFHX Configuration 1 **106G6712**

Standard Conditions

R134a, 120 V/60 Hz, CSIR, fan 3m/s

pe	pc	RGT	Tliq	Cooling capacity			COP	EER	P	I	ṁ	
[°C] [°F]	[°C] [°F]	[°C] [°F]	[°C] [°F]	[W]	[Btu/h]	[kcal/h]	[W/W]	[Btu/Wh]	[W]	[A]	[kg/h]	
-23.3 -10	54.4 129.9	32.2 90	32.2 90	**243**	828	209	**1.44**	4.91	169	2.39	4.71	**ASHRAE LBP**
-6.7 20	54.4 129.9	35 95	46.1 115	**498**	1700	428	**2.00**	6.81	250	2.90	10.85	**ASHRAE MBP**
7.2 45	54.4 129.9	35 95	46.1 115	**867**	2958	746	**2.72**	9.29	318	3.33	19.19	**ASHRAE HBP**
-35 -31	40 104	20 68	40 104	**119**	405	102	**1.03**	3.52	115	2.02	2.60	**EN12900 LBP**
-10 14	45 113	20 68	45 113	**430**	1467	370	**2.02**	6.89	213	2.67	10.03	**EN12900 MBP**
5 41	50 122	20 68	50 122	**737**	2513	633	**2.53**	8.63	291	3.16	18.48	**EN12900 HBP**

Performance Tables

R134a, 120 V/60 Hz, CSIR, fan 3m/s

pc= 45/113 | RGT= 32/89.6 | Tliq= 45/113 | °C/°F

pe		Cooling capacity			COP	EER	P	I	ṁ
[°C]	[°F]	[W]	[Btu/h]	[kcal/h]	[W/W]	[Btu/Wh]	[W]	[A]	[kg/h]
-35	-31	**108**	367	93	**0.91**	3.10	118	2.05	2.32
-30	-22	**156**	532	134	**1.16**	3.97	134	2.16	3.36
-20	-4	**278**	947	239	**1.62**	5.53	171	2.41	6.02
-10	14	**445**	1520	383	**2.09**	7.14	213	2.67	9.73
0	32	**674**	2299	579	**2.66**	9.08	253	2.92	14.87
10	50	**977**	3335	841	**3.40**	11.60	287	3.14	21.88
15	59	**1162**	3964	999	**3.87**	13.20	300	3.23	26.25

pc= 55/131 | RGT= 32/89.6 | Tliq= 55/131 | °C/°F

-35	-31	**77**	262	66	**0.61**	2.08	126	2.10	1.82
-30	-22	**124**	422	106	**0.87**	2.97	142	2.22	2.94
-20	-4	**238**	810	204	**1.29**	4.39	184	2.49	5.68
-10	14	**390**	1330	335	**1.67**	5.68	234	2.80	9.39
0	32	**595**	2029	511	**2.08**	7.11	285	3.12	14.50
10	50	**867**	2959	746	**2.60**	8.87	334	3.44	21.48
15	59	**1033**	3525	889	**2.91**	9.94	354	3.58	25.86

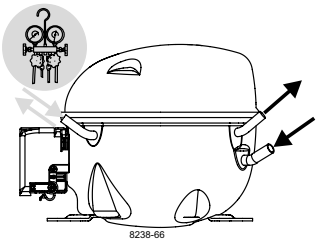

KL Compressors

SECOP

Keep electrical equipment clear from oil, chemicals, and water

When operated with a flammable refrigerant, only spark-proof starting equipment is allowed.

RSIR

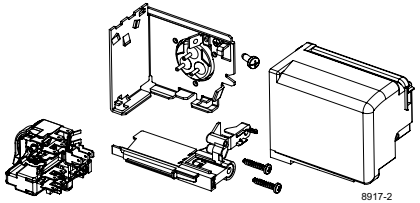

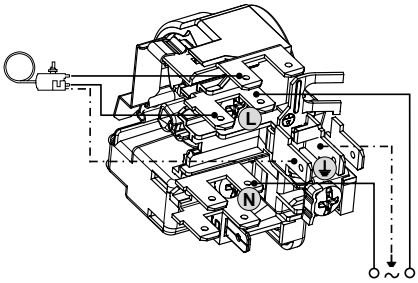

RSCR

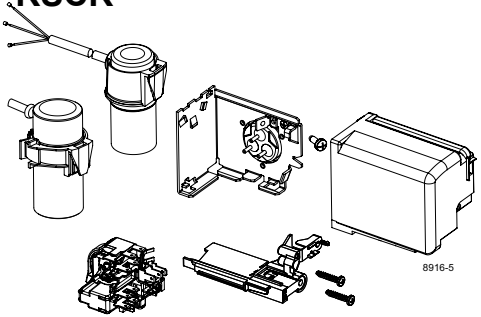

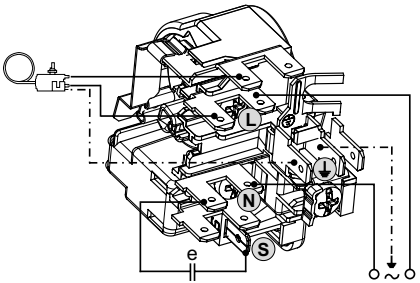

CSIR

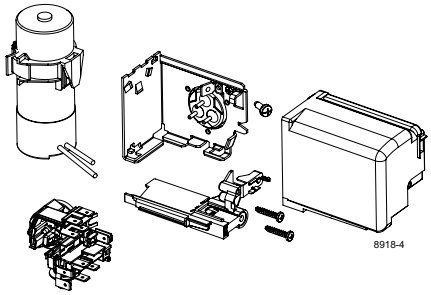

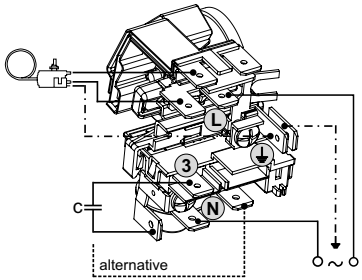

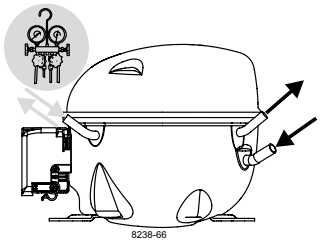

KL Compressors

SECOP

Keep electrical equipment clear from oil, chemicals, and water

When operated with a flammable refrigerant, only spark-proof starting equipment is allowed.

Service/Repair – R290, R600a, R170, R1270, R1234yf

(applies to all flammable refrigerants)



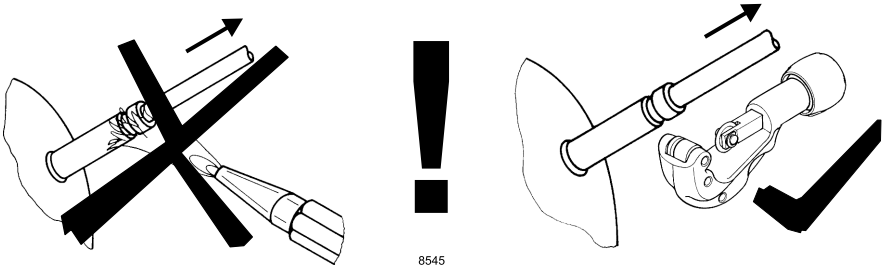

Dismantling, recycling, disposal: At the end of a compressor's lifecycle, proceed by separating and storing components according to their environmental impact. Parts that may cause pollution must be clearly identified and handled separately, ensuring appropriate disposal. Refrigerant gas must not be released into the environment and should be recovered by qualified operators. Compressor oil must also be collected separately. The compressor should be disposed of at specialized disposal centers in accordance with the applicable regulations. **Subject to modifications/alterations. www.secop.com**