Model
GS34MLX

Sales code:
107B0504

Compressor Data

Refrigerant(s)	**R404A / R452A**
Refr. charge - tech. limit	**2000g / 70.55oz**
Weight	**22.30 kg / 49.16lbs**
Displacement	**33.80 cm3 / 2.06cu.in**
Compressors on pallet	**48**



General – Configurations With GS34MLX

–	**Conf. 1**	**Conf. 2**	**Conf. 3**	**Conf. 4**
Motor configuration	CSCR	CSCR	CSCR	CSCR
Power supply (nominal)	220-240 V/50 Hz	220-240 V/50 Hz	220-240 V/50 Hz	220-240 V/50 Hz
Number of phases	1	1	1	1
Voltage range	198-254 V	198-254 V	198-254 V	198-254 V
Approvals	VDE, CCC, EAC	VDE, CCC, EAC	–	–
Starting torque	HST	HST	HST	HST
Refrigerant	R404A	R452A	R448A	R449A
Application	MBP	MBP	MBP	MBP
Hot gas defrost	OK	OK	OK	OK
Long interval pull down	OK	OK	OK	OK

Application Notes

- Cover, clamp, gasket: pre-assembled to compressor.
- Provision for PE Grounding is located at the PE Stamp on the compressor

Model
GS34MLX

Sales code:
107B0504

Compressor Design

Oil type	**POE**	Motor protection	**internal**
Oil viscosity	**46cSt**	Winding resistance main	**1.5 Ohm**
Oil quantity	**906 cm3 / 30.64fl.oz**	Winding resistance aux	**5.8 Ohm**
Free gas volume comp.	**3,540 cm3 / 119.70fl.oz**	Max. discharge temp.	**120°C / 248°F**

Compressor Dimensions

Housing

A Height	**279mm / 10.98in**
B Height	**267mm / 10.51in**
C Length shell	**224mm / 8.82in**
D Length w. cover	**232mm / 9.13in**
E Width	**173mm / 6.81in**

Find 3D Model here

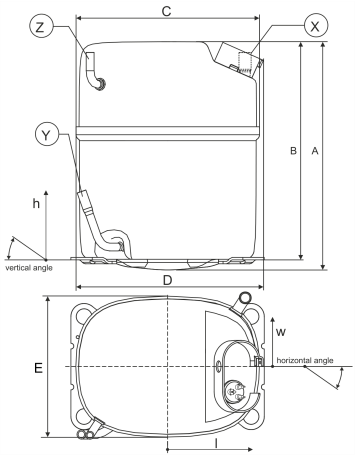

Connectors	Suction X	Discharge Y	Process Z
Diameter [mm]	øi 16.03–16.13 / 0.63–0.64in	øi 9.63–9.73 / 0.38–0.38in	øi 6.4–6.6 / 0.25–0.26in
Material	CU	CU	CU
Horizontal angle ±2°	0°	0°	0°
Vertical angle ±2°	90°	71°	90°
Position l/h/w [mm]	-94.5/234/-84 / -3.72/9.21/-3.31in	-105/84/-84 / -4.13/3.31/-3.31in	94.5/234/84 / 3.72/9.21/3.31in
Straight tube l. [mm]	18 / 0.71in	22.5 / 0.89in	15 / 0.59in

Mounting Accessories

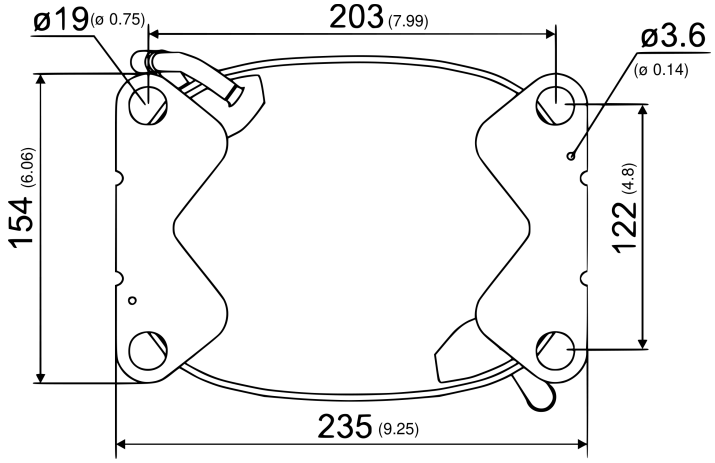

Dimensions in mm [in]

Bolt joint

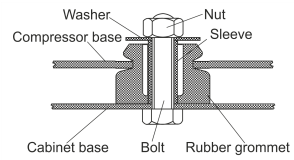

	one comp.	multi pack
Bolt joint | M8 | ø19mm	107B9150	–

Model
GS34MLX Configuration 1

Sales code:
107B0504

Configuration

Motor configuration	**CSCR**
Power supply (nominal)	**220-240 V/50 Hz 1~**
Refrigerant	**R404A**
Application	**MBP**
Voltage range	**198-254 V**
Starting torque	**HST**
Approvals	**VDE, CCC, EAC**
Starting device type	**relay**
Run capacitor	**20 µF**
Start capacitor	**100 µF**
LRA (locked rotor amps / 4s/ U(N))	**46 A**
RLA (rated load amps / 1s/ U(N))	**11 A**
Cut in current (U(N))	**46 A**

Ambient/ machine room temperatures minimum /maximum
Ambient temperature range: 10 - 43°C / 50 - 109°F
Machine room temp. compressor: 10 - 48°C / 50 - 118°F

System Cooling
fan 3m/s

Electrical Accessories / Wiring Diagram

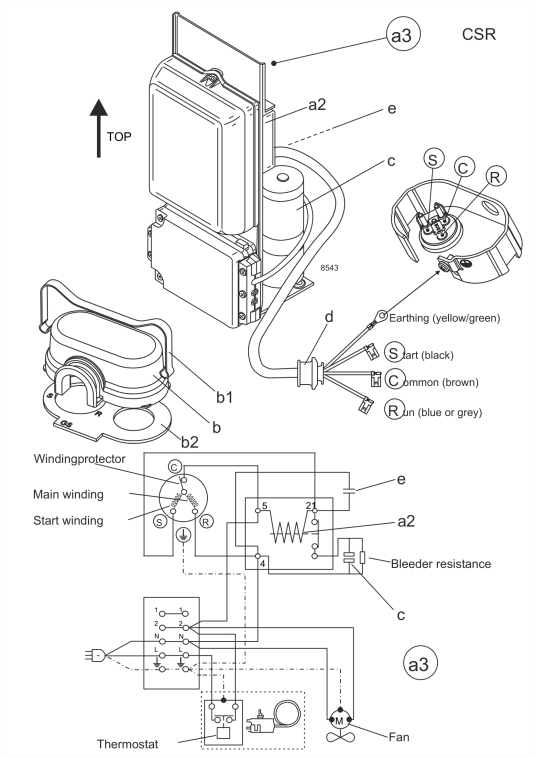

View full size

Components (cover, clamp, gasket: pre assembled)
a3 GS starter kit (600mm) 117-7056
b cover 107B9101
b2 gasket 107B9100
b1 clamp 107B9104

Operation Pressure Range

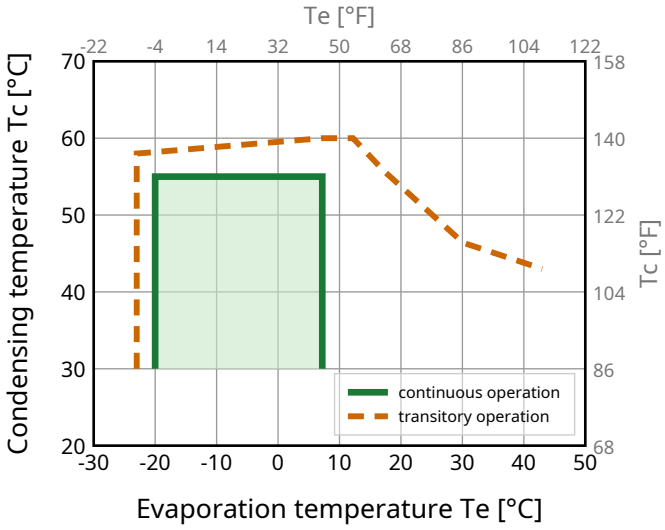

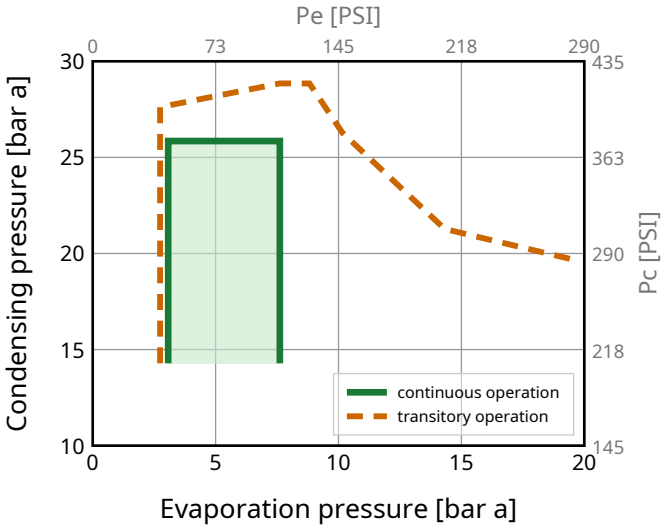

Model
GS34MLX Configuration 1

Sales code:
107B0504

Standard Conditions

R404A, 220 V/50 Hz, CSCR, fan 3m/s

pe	pc	RGT	Tliq	Cooling capacity			COP	EER	P	I	ṁ	
[°C] [°F]	[°C] [°F]	[°C] [°F]	[°C] [°F]	[W]	[Btu/h]	[kcal/h]	[W/W]	[Btu/Wh]	[W]	[A]	[kg/h]	
-6.7 20	54.4 129.9	35 95	46.1 115	**2991**	10204	2572	**1.43**	4.86	2098	10.12	82.15	**ASHRAE MBP**
-10 14	55 131	32 89.6	55 131	**2247**	7666	1932	**1.15**	3.92	1957	9.52	71.81	**CECOMAF MBP**
-10 14	45 113	20 68	45 113	**2589**	8833	2226	**1.45**	4.95	1785	8.79	77.84	**EN12900 MBP**
-6.7 20	48.8 119.8	18.3 64.9	48.8 119.8	**2700**	9213	2322	**1.36**	4.63	1988	9.65	87.99	**ARI540 MBP**
-10 14	45 113	32 89.6	45 113	**2746**	9371	2362	**1.54**	5.25	1785	8.79	75.51	**opt MBP 1**
-25 -13	45 113	32 89.6	45 113	**1399**	4774	1203	**1.15**	3.93	1215	6.33	37.66	**opt MBP 2**

Performance Tables

R404A, 220 V/50 Hz, CSCR, fan 3m/s

pc= 45/113 | RGT= 32/89.6 | Tliq= 45/113 | °C/°F

pe		Cooling capacity			COP	EER	P	I	ṁ
[°C]	[°F]	[W]	[Btu/h]	[kcal/h]	[W/W]	[Btu/Wh]	[W]	[A]	[kg/h]
-20	-4	**1787**	6097	1537	**1.28**	4.36	1397	7.12	48.38
-15	5	**2235**	7625	1922	**1.41**	4.79	1591	7.96	60.94
-10	14	**2746**	9371	2362	**1.54**	5.25	1785	8.79	75.51
-5	23	**3325**	11345	2860	**1.69**	5.77	1968	9.57	92.31
0	32	**3974**	13558	3417	**1.87**	6.37	2128	10.24	111.58
5	41	**4696**	16022	4038	**2.08**	7.11	2253	10.76	133.65
7.2	45	**5037**	17188	4332	**2.19**	7.49	2295	10.93	144.34

pc= 55/131 | RGT= 32/89.6 | Tliq= 55/131 | °C/°F

-20	-4	**1440**	4913	1238	**0.96**	3.26	1505	7.59	45.21
-15	5	**1816**	6196	1562	**1.05**	3.59	1726	8.53	57.48
-10	14	**2247**	7666	1932	**1.15**	3.92	1957	9.52	71.81
-5	23	**2736**	9335	2353	**1.25**	4.27	2187	10.50	88.45
0	32	**3287**	11214	2827	**1.37**	4.66	2405	11.42	107.68
5	41	**3902**	13314	3356	**1.50**	5.12	2599	12.23	129.87
7.2	45	**4194**	14311	3607	**1.57**	5.35	2673	12.54	140.70

Model
GS34MLX Configuration 2

Sales code:
107B0504

Configuration

Motor configuration	**CSCR**
Power supply (nominal)	**220-240 V/50 Hz 1~**
Refrigerant	**R452A**
Application	**MBP**
Voltage range	**198-254 V**
Starting torque	**HST**
Approvals	**VDE, CCC, EAC**
Starting device type	**relay**
Run capacitor	**20 µF**
Start capacitor	**100 µF**
LRA (locked rotor amps / 4s/ U(N))	**46 A**
RLA (rated load amps / 1s/ U(N))	**11 A**
Cut in current (U(N))	**46 A**

Ambient/ machine room temperatures minimum /maximum
Ambient temperature range: 10 - 43°C / 50 - 109°F
Machine room temp. compressor: 10 - 48°C / 50 - 118°F

System Cooling
fan 3m/s

Electrical Accessories / Wiring Diagram

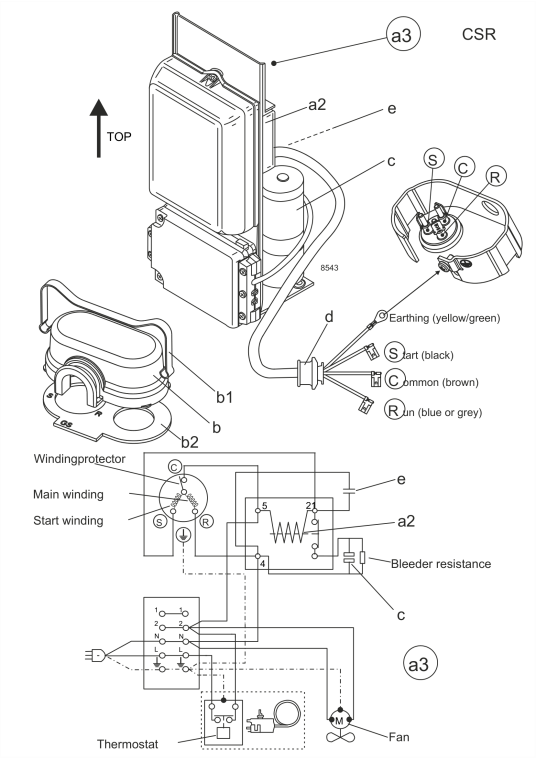

View full size

Components (cover, clamp, gasket: pre assembled)
a3 GS starter kit (600mm) 117-7056
b cover 107B9101
b2 gasket 107B9100
b1 clamp 107B9104

Operation Pressure Range

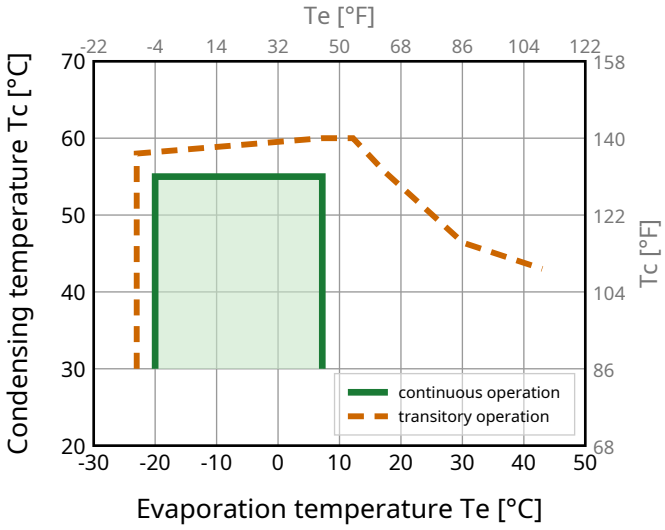

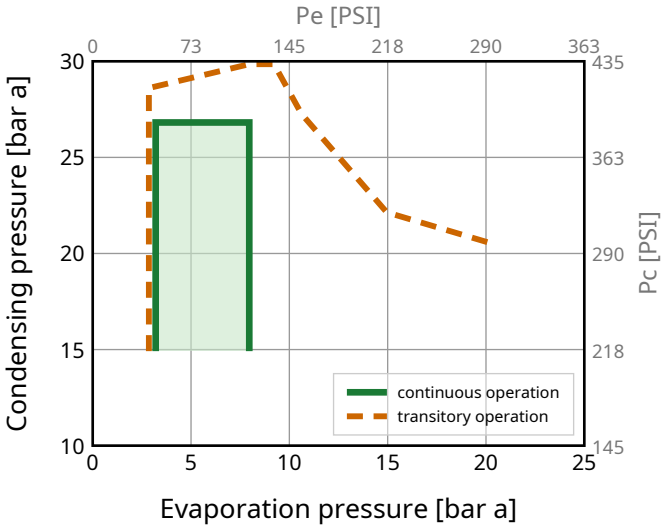

Model Sales code:

GS34MLX Configuration 2 **107B0504**

Standard Conditions

R452A, 220 V/50 Hz, CSCR, fan 3m/s

pe	pc	RGT	Tliq	Cooling capacity			COP	EER	P	I	ṁ	
[°C] [°F]	[°C] [°F]	[°C] [°F]	[°C] [°F]	[W]	[Btu/h]	[kcal/h]	[W/W]	[Btu/Wh]	[W]	[A]	[kg/h]	
-6.7 20	54.4 129.9	35 95	46.1 115	**3428**	11697	2948	**1.85**	6.32	1851	9.90	97.79	**ASHRAE MBP**
-10 14	55 131	32 89.6	55 131	**2569**	8766	2210	**1.48**	5.05	1738	9.47	84.92	**CECOMAF MBP**
-10 14	45 113	20 68	45 113	**2954**	10080	2541	**1.82**	6.20	1627	9.05	92.15	**EN12900 MBP**
-6.7 20	48.8 119.8	18.3 64.9	48.8 119.8	**3105**	10594	2670	**1.75**	5.96	1778	9.62	104.80	**ARI540 MBP**
-10 14	45 113	32 89.6	45 113	**3134**	10692	2695	**1.93**	6.57	1627	9.05	89.47	**opt MBP 1**
-25 -13	45 113	32 89.6	45 113	**1547**	5278	1330	**1.32**	4.51	1169	7.31	43.25	**opt MBP 2**

Performance Tables

R452A, 220 V/50 Hz, CSCR, fan 3m/s

pc= 45/113 | RGT= 20/68 | Tliq= 45/113 | °C/°F

pe		Cooling capacity			COP	EER	P	I	ṁ
[°C]	[°F]	[W]	[Btu/h]	[kcal/h]	[W/W]	[Btu/Wh]	[W]	[A]	[kg/h]
-20	-4	**1896**	6471	1631	**1.43**	4.89	1323	7.89	58.05
-15	5	**2388**	8149	2054	**1.62**	5.53	1474	8.47	73.74
-10	14	**2954**	10080	2541	**1.82**	6.20	1627	9.05	92.15
-5	23	**3607**	12308	3102	**2.02**	6.89	1786	9.65	113.90
0	32	**4360**	14878	3750	**2.23**	7.61	1955	10.30	139.68
5	41	**5226**	17832	4495	**2.44**	8.34	2139	11.00	170.36
7.2	45	**5646**	19266	4856	**2.54**	8.66	2226	11.33	185.67

pc= 55/131 | RGT= 20/68 | Tliq= 55/131 | °C/°F

-20	-4	**1508**	5144	1297	**1.10**	3.74	1375	8.09	54.04
-15	5	**1918**	6544	1649	**1.23**	4.20	1556	8.78	69.45
-10	14	**2387**	8144	2053	**1.37**	4.69	1738	9.47	87.47
-5	23	**2927**	9988	2517	**1.52**	5.20	1922	10.17	108.81
0	32	**3552**	12119	3055	**1.68**	5.73	2115	10.91	134.30
5	41	**4274**	14583	3676	**1.84**	6.28	2321	11.69	164.96
7.2	45	**4626**	15784	3978	**1.92**	6.53	2416	12.05	180.40

Model
GS34MLX Configuration 3

Sales code:
107B0504

Configuration

Motor configuration	**CSCR**
Power supply (nominal)	**220-240 V/50 Hz 1~**
Refrigerant	**R448A**
Application	**MBP**
Voltage range	**198-254 V**
Starting torque	**HST**
Starting device type	**relay**
Run capacitor	**20 µF**
Start capacitor	**100 µF**
LRA (locked rotor amps / 4s/ U(N))	**46 A**
RLA (rated load amps / 1s/ U(N))	**11 A**
Cut in current (U(N))	**46 A**

Ambient/ machine room temperatures minimum /maximum
Ambient temperature range: 10 - 38°C / 50 - 100°F
Machine room temp. compressor: 10 - 43°C / 50 - 109°F

System Cooling
fan 3m/s

Electrical Accessories / Wiring Diagram

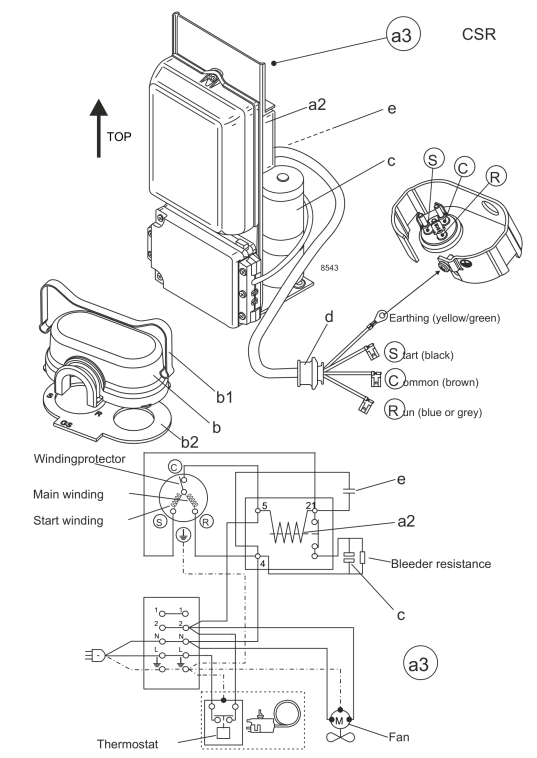

View full size

Components (cover, clamp, gasket: pre assembled)
a3 GS starter kit (600mm) 117-7056
b cover 107B9101
b2 gasket 107B9100
b1 clamp 107B9104

Operation Pressure Range

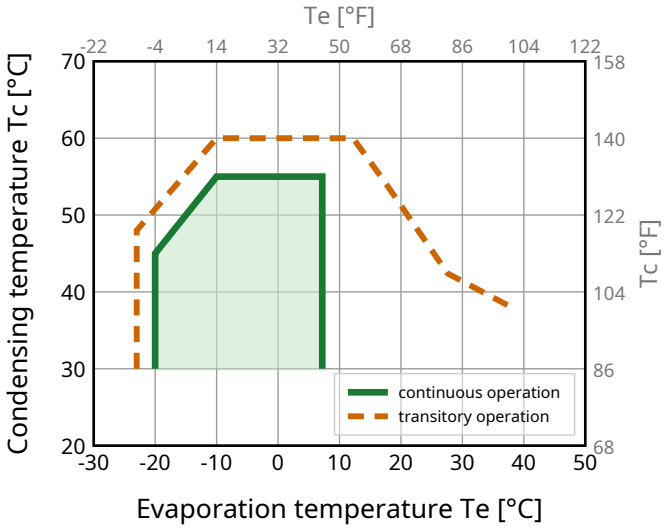

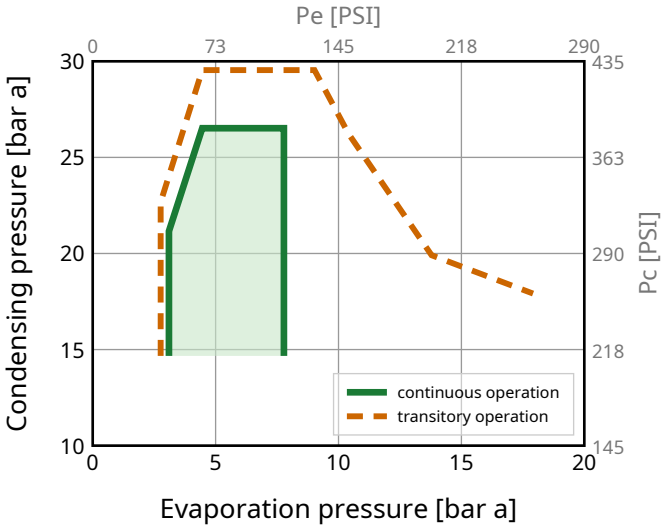

Model Sales code:

GS34MLX Configuration 3 **107B0504**

Standard Conditions

R448A, 220 V/50 Hz, CSCR, fan 3m/s

pe	pc	RGT	Tliq	Cooling capacity			COP	EER	P	I	ṁ	
[°C] [°F]	[°C] [°F]	[°C] [°F]	[°C] [°F]	[W]	[Btu/h]	[kcal/h]	[W/W]	[Btu/Wh]	[W]	[A]	[kg/h]	
-6.7 20	54.4 129.9	35 95	46.1 115	**3213**	10963	2763	**1.83**	6.23	1758	9.55	71.11	**ASHRAE MBP**
-10 14	55 131	32 89.6	55 131	**2472**	8436	2126	**1.50**	5.12	1646	9.12	61.42	**CECOMAF MBP**
-10 14	45 113	20 68	45 113	**2832**	9663	2436	**1.84**	6.27	1540	8.72	67.22	**EN12900 MBP**
-6.7 20	48.8 119.8	18.3 64.9	48.8 119.8	**3029**	10336	2605	**1.79**	6.12	1688	9.28	76.56	**ARI540 MBP**
-10 14	45 113	32 89.6	45 113	**2949**	10062	2536	**1.92**	6.53	1540	8.72	65.26	**opt MBP 1**
-25 -13	45 113	32 89.6	45 113	**1415**	4828	1217	**1.30**	4.43	1090	7.01	30.73	**opt MBP 2**

Performance Tables

R448A, 220 V/50 Hz, CSCR, fan 3m/s

pc= 45/113 | RGT= 20/68 | Tliq= 45/113 | °C/°F

pe		Cooling capacity			COP	EER	P	I	ṁ
[°C]	[°F]	[W]	[Btu/h]	[kcal/h]	[W/W]	[Btu/Wh]	[W]	[A]	[kg/h]
-20	-4	**1785**	6091	1535	**1.44**	4.91	1241	7.58	41.66
-15	5	**2270**	7744	1952	**1.63**	5.58	1389	8.15	53.38
-10	14	**2832**	9663	2436	**1.84**	6.27	1540	8.72	67.22
-5	23	**3486**	11895	2998	**2.06**	7.01	1696	9.31	83.65
0	32	**4246**	14487	3651	**2.28**	7.78	1863	9.95	103.21
5	41	**5124**	17484	4407	**2.51**	8.55	2044	10.64	126.53
7.2	45	**5552**	18944	4775	**2.61**	8.90	2130	10.96	138.17

pc= 55/131 | RGT= 20/68 | Tliq= 55/131 | °C/°F

-20	-4	**1456**	4969	1252	**1.13**	3.86	1289	7.77	38.41
-15	5	**1872**	6389	1610	**1.28**	4.35	1467	8.45	49.82
-10	14	**2354**	8030	2024	**1.43**	4.88	1646	9.12	63.27
-5	23	**2913**	9938	2505	**1.59**	5.44	1829	9.82	79.28
0	32	**3564**	12161	3065	**1.76**	6.02	2020	10.55	98.45
5	41	**4321**	14744	3716	**1.94**	6.63	2225	11.32	121.49
7.2	45	**4691**	16006	4034	**2.02**	6.90	2320	11.68	133.09

Model
GS34MLX Configuration 4

Sales code:
107B0504

Configuration

Motor configuration	**CSCR**
Power supply (nominal)	**220-240 V/50 Hz 1~**
Refrigerant	**R449A**
Application	**MBP**
Voltage range	**198-254 V**
Starting torque	**HST**
Starting device type	**relay**
Run capacitor	**20 µF**
Start capacitor	**100 µF**
LRA (locked rotor amps / 4s/ U(N))	**46 A**
RLA (rated load amps / 1s/ U(N))	**11 A**
Cut in current (U(N))	**46 A**

Ambient/ machine room temperatures minimum /maximum
Ambient temperature range: 10 - 38°C / 50 - 100°F
Machine room temp. compressor: 10 - 43°C / 50 - 109°F

System Cooling
fan 3m/s

Electrical Accessories / Wiring Diagram

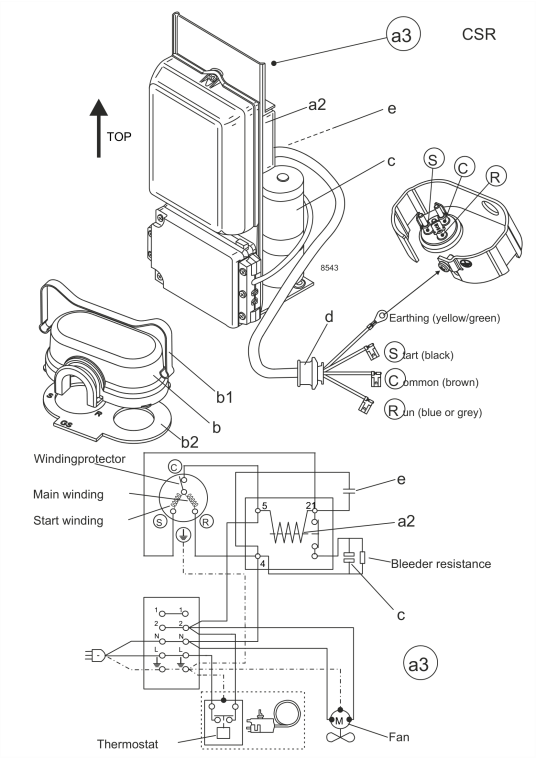

View full size

Components (cover, clamp, gasket: pre assembled)
a3 GS starter kit (600mm) 117-7056
b cover 107B9101
b2 gasket 107B9100
b1 clamp 107B9104

Operation Pressure Range

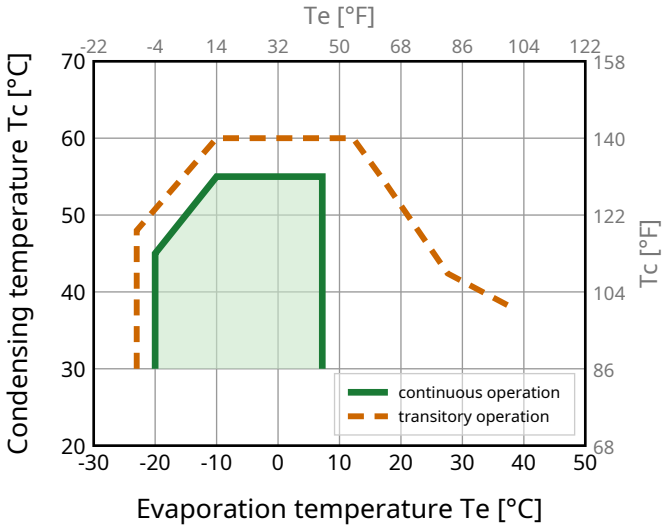

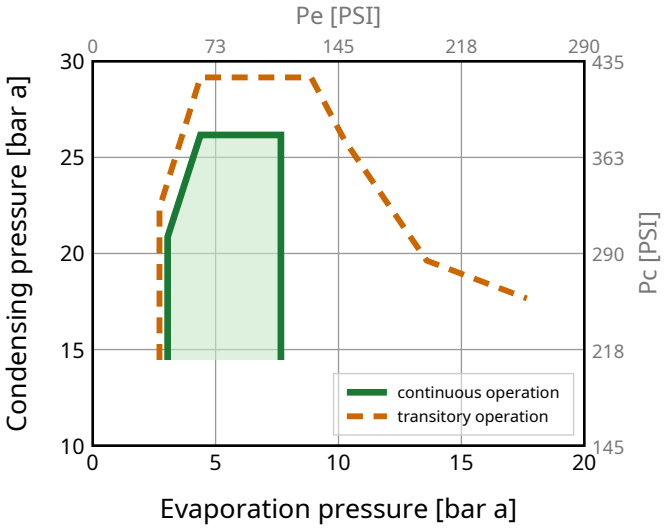

Model
GS34MLX Configuration 4

Sales code:
107B0504

Standard Conditions

R449A, 220 V/50 Hz, CSCR, fan 3m/s

pe	pc	RGT	Tliq	Cooling capacity			COP	EER	P	I	ṁ	
[°C] [°F]	[°C] [°F]	[°C] [°F]	[°C] [°F]	[W]	[Btu/h]	[kcal/h]	[W/W]	[Btu/Wh]	[W]	[A]	[kg/h]	
-6.7 20	54.4 129.9	35 95	46.1 115	**3198**	10913	2751	**1.83**	6.24	1748	9.51	71.51	**ASHRAE MBP**
-10 14	55 131	32 89.6	55 131	**2459**	8390	2115	**1.50**	5.12	1637	9.09	61.78	**CECOMAF MBP**
-10 14	45 113	20 68	45 113	**2817**	9612	2423	**1.84**	6.27	1532	8.69	67.61	**EN12900 MBP**
-6.7 20	48.8 119.8	18.3 64.9	48.8 119.8	**3011**	10274	2590	**1.79**	6.12	1679	9.25	76.98	**ARI540 MBP**
-10 14	45 113	32 89.6	45 113	**2936**	10016	2525	**1.92**	6.53	1532	8.69	65.64	**opt MBP 1**
-25 -13	45 113	32 89.6	45 113	**1411**	4814	1213	**1.30**	4.43	1087	7.00	30.95	**opt MBP 2**

Performance Tables

R449A, 220 V/50 Hz, CSCR, fan 3m/s

pc= 45/113 | RGT= 20/68 | Tliq= 45/113 | °C/°F

pe		Cooling capacity			COP	EER	P	I	ṁ
[°C]	[°F]	[W]	[Btu/h]	[kcal/h]	[W/W]	[Btu/Wh]	[W]	[A]	[kg/h]
-20	-4	**1777**	6064	1528	**1.44**	4.90	1236	7.57	41.94
-15	5	**2258**	7706	1942	**1.63**	5.57	1384	8.13	53.71
-10	14	**2817**	9612	2423	**1.84**	6.27	1532	8.69	67.61
-5	23	**3467**	11829	2982	**2.06**	7.01	1687	9.28	84.11
0	32	**4222**	14404	3630	**2.28**	7.78	1852	9.90	103.76
5	41	**5094**	17382	4381	**2.51**	8.56	2030	10.58	127.18
7.2	45	**5520**	18833	4747	**2.61**	8.91	2114	10.90	138.88

pc= 55/131 | RGT= 20/68 | Tliq= 55/131 | °C/°F

-20	-4	**1448**	4942	1246	**1.13**	3.85	1284	7.75	38.67
-15	5	**1861**	6351	1601	**1.27**	4.35	1461	8.42	50.13
-10	14	**2339**	7979	2011	**1.43**	4.88	1637	9.09	63.64
-5	23	**2894**	9873	2489	**1.59**	5.43	1817	9.78	79.72
0	32	**3540**	12079	3045	**1.76**	6.02	2006	10.49	98.98
5	41	**4292**	14644	3691	**1.95**	6.64	2206	11.25	122.14
7.2	45	**4660**	15898	4007	**2.03**	6.92	2299	11.60	133.79