Technical Data Compressor

SECOP

Model

Designation	**NL11MF**	**220-240V/50Hz 1~**	Sales code:	**105G6151**

Compressor design

Oil type	Polyolester	Refrigerant(s)	**R134a**
Oil viscosity	32cSt	Displacement	11,15cm³ / 0,68cu.in
Oil quantity	298cm³ / 10,1fl.oz	Compressors on pallet	80
Refr. charge - tech. limit	600g / 21,2oz		
Free gas volume comp.	2360cm³ / 79,8fl.oz		
Weight	10,5kg / 23,1lbs		
Motor protection	1# internal		
Winding resistance main	6,1Ω (at 25°C)		
Winding resistance aux	18,35Ω (at 25°C)		
Max. winding temp.	125°C / 257°F		
Max. discharge temp.	130°C / 266°F		

General - Configurations with NL11MF

	Conf. 1	**Conf. 2**
Motor configuration	RSIR	CSIR
Power supply (nominal)	220-240V/50Hz	220-240V/50Hz
Number of phases	1	1
Voltage range	187-254V	187-254V
Approvals	VDE, CCC, EAC	VDE, CCC, EAC
Starting torque	LST	HST
Note	- / -	

Applications with NL11MF

	Conf. 1	**Conf. 2**
Refrigerant	R134a	R134a
Application	MBP+HBP	MBP+HBP
System cooling	fan 3m/s	fan 3m/s
Hot gas defrost	OK	OK
Long interval pull down	OK	OK

Electrical data - Configurations with NL11MF

	Conf. 1	**Conf. 2**
Starting device type	PTC	relay
Run capacitor	-/-	-/-
Start capacitor	-/-	125µF
LRA (locked rotor amps / 4s/ U(N))	13A	16,6A
RLA (rated load amps / 1s/ U(N))	2,8A	2,8A
Cut in current (U(N))	17A	17A

Model

Designation **NL11MF** **220-240V/50Hz 1~** Sales code: **105G6151**

Compressor dimensions

Housing		
	A Height	203mm / 7,99in
	B Height	197mm / 7,76in
	C Length shell	205mm / 8,07in
	D Length w. cover	254mm / 10in
	E Width	166mm / 6,54in

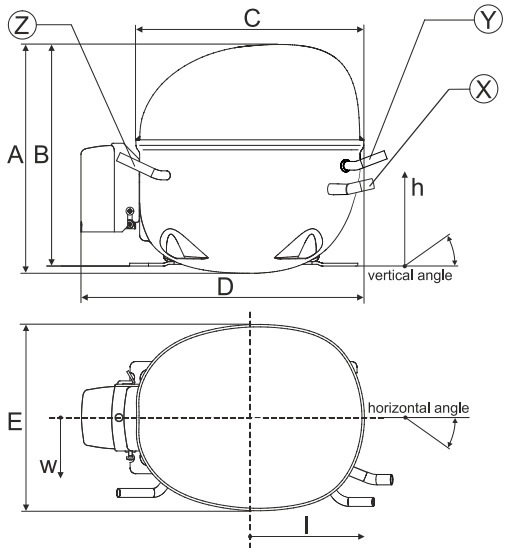

Connectors		**Suction X**	**Discharge Y**	**Process Z**
Diameter	[mm]	øi 8,11-8,29	øi 6,11-6,29	øi 6,11-6,29
(i:inside, o:outside)	[in]	øi 0,32-0,33	øi 0,24-0,25	øi 0,24-0,25
Material		copper	copper	copper
Horizontal angle	±2°	0°	0°	0°
Vertical angle	±2°	15°	35°	155°
Position l/h/w	[mm]	126/76/78	133/103/54	-107/94/72
	[in]	4,9/3/3,1	5,2/4/2,1	-4,2/3,7/2,8
Straight tube l.	[mm]	12	12	12
	[in]	0,5	0,5	0,5

Compressor fixation

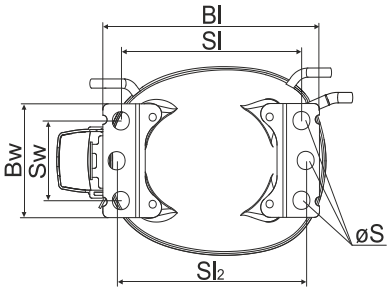

Baseplate	[mm]	[inch]
Bl	204	8.03
Bw	100	3.94

Small holes	[mm]	[inch]
Sl	170	6.7
Sw	70	2.76
Sl2	178	7
øS	ø 16	ø 0.63

Bolt joint

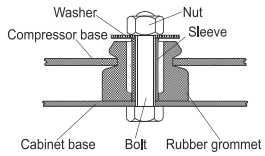

Snap-on

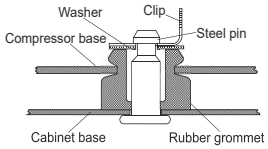

Mounting accessories	one comp.	multi pack
Bolt joint | M6 | ø16mm	118-1917	118-1918
Bolt joint | ø1/4" | ø16mm	118-1946	
Bolt joint | ø1/4" | ø19mm	118-1949	
Snap-on | ø7,3 | ø16mm	118-1947	118-1919

Application notes

Provision for PE Grounding is located at the PE Stamp on the compressor

Model

Designation	NL11MF	220-240V/50Hz	Conf. 1	Sales code:	105G6151

Configuration

Motor configuration	RSIR
Power supply (nominal)	220-240V/50Hz 1~
Refrigerant	R134a
Application	MBP+HBP
Voltage range	187-254V
Starting torque	LST
Approvals	VDE
	CCC
	EAC

Electrical accessories / wiring diagram

RSIR

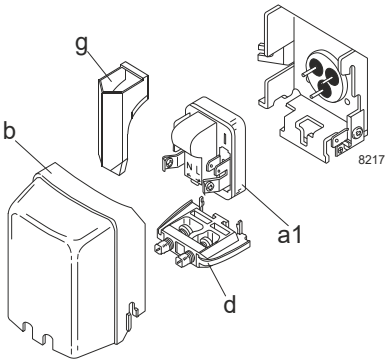

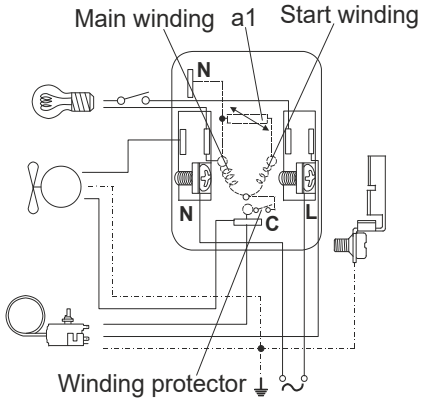

Ambient/ machine room temperatures minimum /maximum

Ambient temperature range:	10 - 43°C / 50 - 110°F
Machine room temperature range:	10 - 48°C / 50 - 119°F
Compressor cooling:	fan 3m/s

Operation pressure range

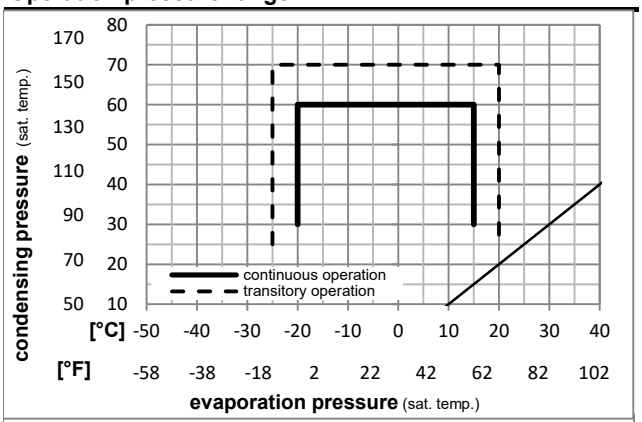

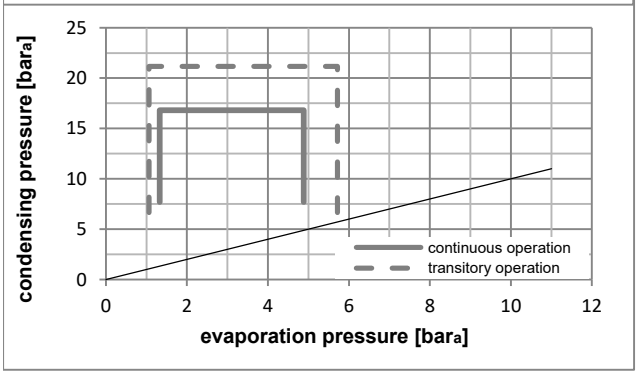

Components

a1	PTC starter (220V, 25Ohm, 4.8mm)	103N0018
b	plastic cover	103N2011
d	cord relief	103N1010
g	protection screen for PTC	103N0476

Alternative components

a1	PTC starter (220V, 25Ohm, 6.3mm)	103N0011
b	plastic cover	103N2010
d	cord relief	103N1010
g	protection screen for PTC	103N0476

Model

Designation **NL11MF** **220-240V/50Hz** **Conf. 1** Sales code: **105G6151**

Optimization + standard conditions R134a, 220V/50Hz, RSIR, fan 3m/s, VDE, CCC, EAC

	pe (Evaporating pressure (saturation temperature))	pc (Condensing pressure (saturation temperature))	RGT (Return gas temp.)	Tliq (Liquid temp.)	Cooling capacity [W]	[Btu/h]	[kcal/h]	COP [W/W]	EER [Btu/Wh]	[kcal/Wh]	P1 (Power consumption) [W]	I (Current consumption) [A]	ṁ (Ref. mass flow) [kg/h]	
[°C]	-7	54	35	46	626,5	2140	539,2	1,61	5,51	1,39	388,4	2,46	13,67	**ASHRAE MBP**
[°F]	20	130	95	115										
[°C]	-10	55	32	55	485,0	1656	417,4	1,35	4,60	1,16	360,0	2,37	11,73	**cecomaf MBP**
[°F]	14	131	90	131										
[°C]	-10	45	20	45	546,1	1865	470,0	1,59	5,44	1,37	342,8	2,31	12,78	**EN12900 MBP**
[°F]	14	113	68	113										
[°C]	-7	49	18	49	594,7	2031	511,8	1,58	5,40	1,36	376,3	2,42	14,69	**ARI540 MBP**
[°F]	20	120	65	120										
[°C]	-10	45	32	45	566,6	1935	487,6	1,65	5,64	1,42	342,8	2,31	12,40	**opt**
[°F]	14	113	90	113										
[°C]	-25	45	32	45	264,5	903	227,6	1,14	3,90	0,98	231,4	2,07	5,73	**opt**
[°F]	-13	113	90	113										

Performance tables R134a, 220V/50Hz, RSIR, fan 3m/s, VDE, CCC, EAC

	pe [°C]	[°F]	Cooling capacity [W]	[Btu/h]	[kcal/h]	COP [W/W]	EER [Btu/Wh]	[kcal/Wh]	P1 [W]	I [A]	m [kg/h]
[°C / °F]	-20	-4	347,6	1187	299,2	1,30	4,44	1,12	267,5	2,13	7,55
cond. pressure	-15	5	447,5	1528	385,1	1,47	5,01	1,26	304,8	2,21	9,75
pc= 45/113	-10	14	566,6	1935	487,6	1,65	5,64	1,42	342,8	2,31	12,40
return gas temp.	-5	23	707,6	2417	609,0	1,86	6,34	1,60	381,2	2,42	15,56
RGT= 32/90	0	32	873,3	2982	751,6	2,08	7,11	1,79	419,5	2,55	19,31
liquid temp	5	41	1066,2	3641	917,6	2,33	7,96	2,01	457,3	2,70	23,74
Tliq= 45/113	15	59	1544,2	5274	1328,9	2,91	9,95	2,51	529,8	3,03	34,98
[°C / °F]	-20	-4	292,0	997	251,3	1,06	3,63	0,92	274,5	2,14	7,00
cond. pressure	-15	5	380,1	1298	327,1	1,20	4,10	1,03	316,5	2,25	9,15
pc= 55/131	-10	14	485,0	1656	417,4	1,35	4,60	1,16	360,0	2,37	11,73
return gas temp	-5	23	609,3	2081	524,4	1,51	5,15	1,30	404,5	2,51	14,81
RGT= 32/90	0	32	755,7	2581	650,4	1,68	5,74	1,45	449,5	2,67	18,49
liquid temp	5	41	926,8	3165	797,6	1,87	6,40	1,61	494,6	2,84	22,84
Tliq= 55/131	15	59	1353,8	4623	1165,1	2,32	7,92	2,00	583,7	3,23	34,00

Model

Designation	NL11MF	220-240V/50Hz	Conf. 2	Sales code:	105G6151

Configuration

Motor configuration	CSIR
Power supply (nominal)	220-240V/50Hz 1~
Refrigerant	R134a
Application	MBP+HBP
Voltage range	187-254V
Starting torque	HST
Approvals	VDE
	CCC
	EAC

Ambient/ machine room temperatures minimum /maximum

Ambient temperature range:	10 - 43°C / 50 - 110°F
Machine room temperature range:	10 - 48°C / 50 - 119°F
Compressor cooling:	fan 3m/s

Operation pressure range

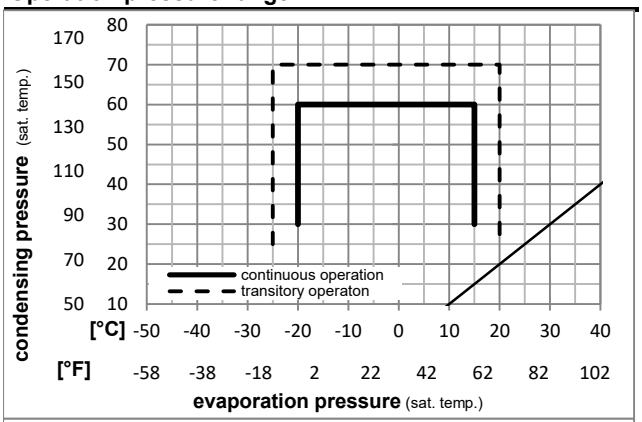

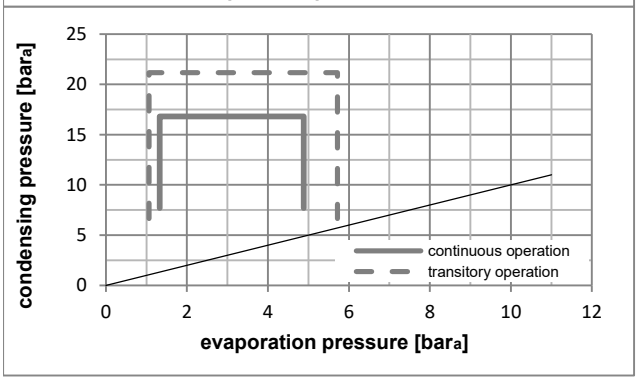

Electrical accessories / wiring diagram

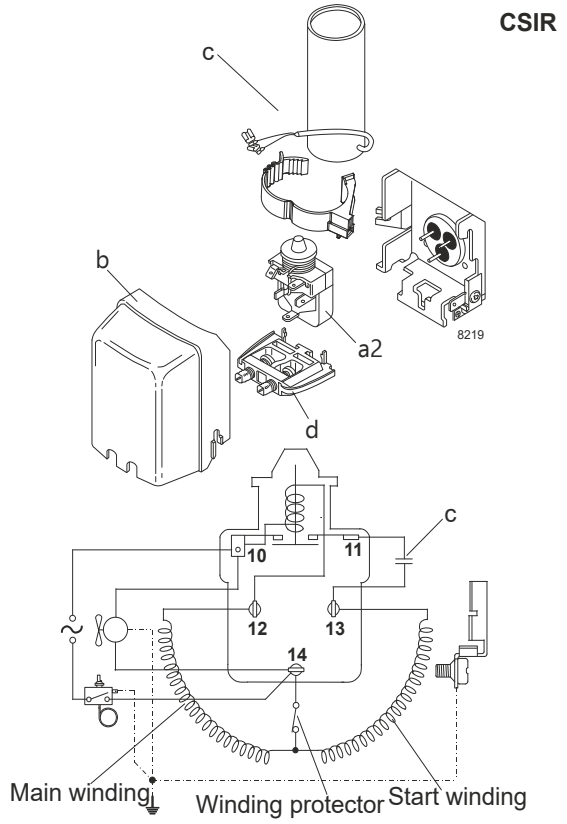

Components

a2	relay	117U6022
c	start capacitor	117U5018
b	plastic cover	103N2011
d	cord relief	103N1010

Model

Designation **NL11MF** **220-240V/50Hz** **Conf. 2** Sales code: **105G6151**

Optimization + standard conditions R134a, 220V/50Hz, CSIR, fan 3m/s, VDE, CCC, EAC

	pe (Evaporating pressure (saturation temperature))	pc (Condensing pressure (saturation temperature))	RGT (Return gas temp.)	Tliq (Liquid temp.)	Cooling capacity [W]	Cooling capacity [Btu/h]	Cooling capacity [kcal/h]	COP [W/W]	EER [Btu/Wh]	EER [kcal/Wh]	P1 (Power consumption) [W]	I (Current consumption) [A]	ṁ (Ref. mass flow) [kg/h]	
[°C]	-7	54	35	46	626,5	2140	539,2	1,61	5,51	1,39	388,4	2,46	13,67	**ASHRAE MBP**
[°F]	20	130	95	115										
[°C]	-10	55	32	55	485,0	1656	417,4	1,35	4,60	1,16	360,0	2,37	11,73	**cecomaf MBP**
[°F]	14	131	90	131										
[°C]	-10	45	20	45	546,1	1865	470,0	1,59	5,44	1,37	342,8	2,31	12,78	**EN12900 MBP**
[°F]	14	113	68	113										
[°C]	-7	49	18	49	594,7	2031	511,8	1,58	5,40	1,36	376,3	2,42	14,69	**ARI540 MBP**
[°F]	20	120	65	120										
[°C]	-10	45	32	45	566,6	1935	487,6	1,65	5,64	1,42	342,8	2,31	12,40	**opt**
[°F]	14	113	90	113										
[°C]	-25	45	32	45	264,5	903	227,6	1,14	3,90	0,98	231,4	2,07	5,73	**opt**
[°F]	-13	113	90	113										

Performance tables R134a, 220V/50Hz, CSIR, fan 3m/s, VDE, CCC, EAC

	pe [°C]	pe [°F]	Cooling capacity [W]	Cooling capacity [Btu/h]	Cooling capacity [kcal/h]	COP [W/W]	EER [Btu/Wh]	EER [kcal/Wh]	P1 [W]	I [A]	m [kg/h]
[°C / °F]	-20	-4	347,6	1187	299,2	1,30	4,44	1,12	267,5	2,13	7,55
cond. pressure	-15	5	447,5	1528	385,1	1,47	5,01	1,26	304,8	2,21	9,75
pc= 45/113	-10	14	566,6	1935	487,6	1,65	5,64	1,42	342,8	2,31	12,40
return gas temp.	-5	23	707,6	2417	609,0	1,86	6,34	1,60	381,2	2,42	15,56
RGT= 32/90	0	32	873,3	2982	751,6	2,08	7,11	1,79	419,5	2,55	19,31
liquid temp	5	41	1066,2	3641	917,6	2,33	7,96	2,01	457,3	2,70	23,74
Tliq= 45/113	15	59	1544,2	5274	1328,9	2,91	9,95	2,51	529,8	3,03	34,98
[°C / °F]	-20	-4	292,0	997	251,3	1,06	3,63	0,92	274,5	2,14	7,00
cond. pressure	-15	5	380,1	1298	327,1	1,20	4,10	1,03	316,5	2,25	9,15
pc= 55/131	-10	14	485,0	1656	417,4	1,35	4,60	1,16	360,0	2,37	11,73
return gas temp	-5	23	609,3	2081	524,4	1,51	5,15	1,30	404,5	2,51	14,81
RGT= 32/90	0	32	755,7	2581	650,4	1,68	5,74	1,45	449,5	2,67	18,49
liquid temp	5	41	926,8	3165	797,6	1,87	6,40	1,61	494,6	2,84	22,84
Tliq= 55/131	15	59	1353,8	4623	1165,1	2,32	7,92	2,00	583,7	3,23	34,00