# Technical Data Compressor

SECOP

**Model**

| | | | | | |
|---|---|---|---|---|---|
| Designation | **TL3G** | **220-240V/50Hz 1~** | **208-230V/60Hz 1~** | Sales code: | **102G4353** |

**Compressor design**

| | | | |
|---|---|---|---|
| Oil type | Polyolester | Refrigerant(s) | **R134a, , R513A** |
| Oil viscosity | 15cST | Displacement | 3,13cm³ / 0,19cu.in |
| Oil quantity | 285cm³ / 9,7fl.oz | Compressors on pallet | 125 |
| Refr. charge - tech. limit | 400g / 14,1oz | | |
| Free gas volume comp. | 1500cm³ / 50,7fl.oz | | |
| Weight | 6,8kg / 15lbs | | |
| Motor protection | 1# internal | | |
| Winding resistance main | 24,6Ω (at 25°C) | | |
| Winding resistance aux | 15,8Ω (at 25°C) | | |
| Max. winding temp. | 125°C / 257°F | | |
| Max. discharge temp. | 130°C / 266°F | | |

**General - Configurations with TL3G**

| | **Conf. 1** | **Conf. 2** | **Conf. 3** | **Conf. 4** |
|---|---|---|---|---|
| Motorconfiguration | CSIR | RSIR | CSIR | RSIR |
| Power supply (nominal) | 220-240V/50Hz | 220-240V/50Hz | 208-230V/60Hz | 208-230V/60Hz |
| Number of phases | 1 | 1 | 1 | 1 |
| Voltage range | 187-254V | 187-254V | 198-254V | 198-254V |
| Approvals | CCC, EAC, UL, EN 60335-2-34 | CCC, EAC, UL, EN 60335-2-34 | CCC, EAC, UL, EN 60335-2-34 | CCC, EAC, UL, EN 60335-2-34 |
| Starting torque | HST | LST | HST | LST |
| Note | - / - | | | |

**Applications with TL3G**

| | **Conf. 1** | **Conf. 2** | **Conf. 3** | **Conf. 4** |
|---|---|---|---|---|
| Refrigerant | R134a | R134a | R134a | R134a |
| Application | LBP+MBP+HBP | LBP+MBP+HBP | LBP | LBP |
| System cooling | static | static | static | static |
| Hot gas defrost | OK | OK | OK | OK |
| Long interval pull down | OK | OK | OK | OK |

**Electrical data - Configurations with TL3G**

| | **Conf. 1** | **Conf. 2** | **Conf. 3** | **Conf. 4** |
|---|---|---|---|---|
| Starting device type | relay | PTC | relay | PTC |
| Run capacitor | -/- | -/- | -/- | -/- |
| Start capacitor | 60µF | -/- | 60µF | -/- |
| LRA (locked rotor amps / 4s) | 4,8A | 3,4A | -A | -A |
| RLA (rated load amps / 1s) | 0,8A | 0,8A | -A | -A |
| Cut in current | 8,3A | 8,3A | -A | -A |

## Model

| Designation | TL3G | 220-240V/50Hz 1~ 208-230V/60Hz 1~ | Sales code: | 102G4353 |
|---|---|---|---|---|

## Compressor dimensions

| Housing | | |
|---|---|---|
| | A Height | 163,5mm / 6,44in |
| | B Height | 159mm / 6,26in |
| | C Length shell | 176,5mm / 6,95in |
| | D Length w. cover | 222mm / 8,74in |
| | E Width | 157mm / 6,18in |

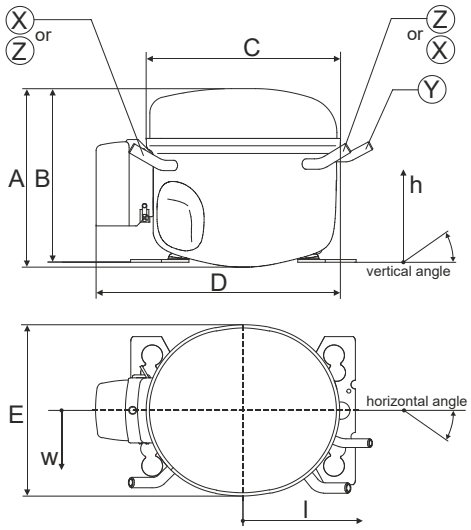


| Connectors | | Suction X | Discharge Y | Process Z |
|---|---|---|---|---|
| Diameter | [mm] | øi 6,11-6,29 | øi 5,12-5,22 | øi 6,11-6,29 |
| (i:inside, o:outside) | [in] | øi 0,24-0,25 | øi 0,2-0,21 | øi 0,24-0,25 |
| Material | | copper | copper | copper |
| Horizontal angle | ±2° | 20° | 51° | 135° |
| Vertical angle | ±2° | 90° | 90° | 90° |
| Position l/h/w | [mm] | 68/127/71 | 96/125/31 | -75/127/64 |
| | [in] | 2,7/5/2,8 | 3,8/4,9/1,2 | -3/5/2,5 |
| Straight tube l. | [mm] | 12 | 12 | 12 |
| | [in] | 0,5 | 0,5 | 0,5 |

## Compressor fixation

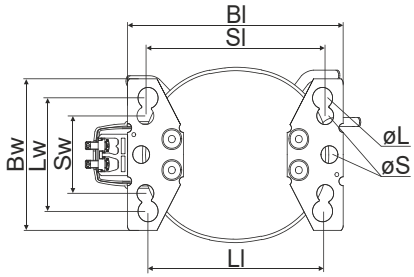


| Baseplate | [mm] | [inch] |
|---|---|---|
| Bl | 204 | 8.03 |
| Bw | 136 | 5.35 |

| Large holes | [mm] | [inch] |
|---|---|---|
| Ll | 165 | 6.5 |
| Lw | 101.6 | 4 |
| øL | ø 19 | ø 0.75 |

| Small holes | [mm] | [inch] |
|---|---|---|
| Sl | 170 | 6.7 |
| Sw | 70 | 2.76 |
| øS | ø 16 | ø 0.63 |

Bolt joint

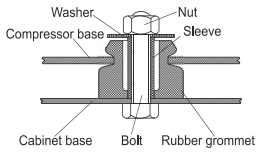


Snap-on

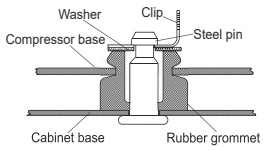


| Mounting accessories | one comp. | multi pack |
|---|---|---|
| Bolt joint \| M6 \| ø16mm | 118-1917 | 118-1918 |
| Bolt joint \| ø1/4" \| ø16mm | 118-1946 | |
| Snap-on \| ø7,3 \| ø16mm | 118-1947 | 118-1919 |

## Application notes

LRA value on compressor label and datasheet may differ due to different test conditions for UL approval.

## Model

| Designation | TL3G | 220-240V/50Hz | Conf. 1 | Sales code: | 102G4353 |
|---|---|---|---|---|---|

## Configuration

| | |
|---|---|
| Motorconfiguration | CSIR |
| Power supply (nominal) | 220-240V/50Hz 1~ |
| Refrigerant | R134a |
| Application | LBP+MBP+HBP |
| Voltage range | 187-254V |
| Starting torque | HST |
| Approvals | CCC |
| | EAC |
| | UL |
| | EN 60335-2-34 |

## Ambient temperatures / system cooling

| | |
|---|---|
| Ambient temperature min.: | 10°C / 50°F |
| Ambient temperature max.: | 43°C / 110°F |

| System cooling (n/a: outside limits) | | | |
|---|---|---|---|
| T ambient | LBP | MBP | HBP |
| 32°C / 90°F | static | static | fan 3m/s |
| 38°C / 100°F | static | static | fan 3m/s |
| 43°C / 110°F | static | static | fan 3m/s |

## Operation pressure range

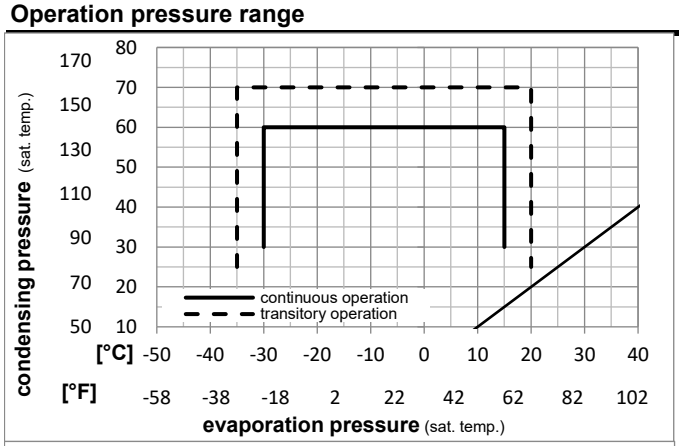


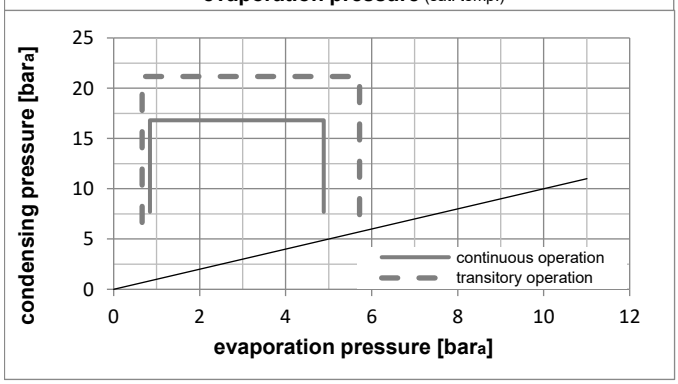


## Electrical accessories / wiring diagram

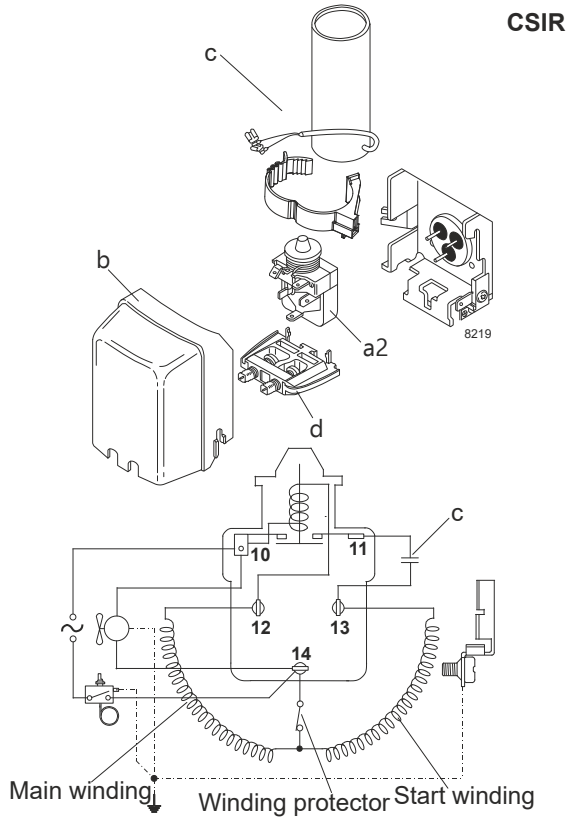


Components

| | | |
|---|---|---|
| a2 | assy. relay | 117U6009 |
| c | start capacitor (60µF) | 117U5014 |
| b | plastic cover | 103N2010 |
| d | cord relief | 103N1010 |

Alternative components

| | | |
|---|---|---|
| b | plastic cover | 103N2011 |

**Model**

| Designation | | | | Sales code: |
|---|---|---|---|---|
| | **TL3G** | **220-240V/50Hz** | **Conf. 1** | **102G4353** |

**Optimization + standard conditions** R134a, 220V/50Hz, CSIR, static, CCC, EAC, UL, EN 60335-2-34

| | pe (Evaporating pressure (saturation temperature)) | pc (Condensing pressure (saturation temperature)) | RGT (Return gas temp.) | Tliq (Liquid temp.) | Cooling capacity [W] | [Btu/h] | [kcal/h] | COP [W/W] | EER [Btu/Wh] | [kcal/Wh] | P1 (Power consumption) [W] | I (Current consumption) [A] | ṁ (Ref. mass flow) [kg/h] | |
|---|---|---|---|---|---|---|---|---|---|---|---|---|---|---|
| [°C] | -23 | 54 | 32 | 32 | 58,3 | 199 | 50,1 | 0,85 | 2,90 | 0,73 | 68,6 | 0,70 | 1,13 | **ASHRAE LBP** |
| [°F] | -10 | 130 | 90 | 90 | | | | | | | | | | |
| [°C] | -7 | 54 | 35 | 46 | 139,2 | 475 | 119,8 | 1,34 | 4,59 | 1,16 | 103,6 | 0,79 | 3,04 | **ASHRAE MBP** |
| [°F] | 20 | 130 | 95 | 115 | | | | | | | | | | |
| [°C] | 7,2 | 54 | 35 | 46 | 257,1 | 878 | 221,3 | 1,86 | 6,36 | 1,60 | 138,0 | 0,89 | 5,70 | **ASHRAE HBP** |
| [°F] | 45 | 130 | 95 | 115 | | | | | | | | | | |
| [°C] | -35 | 40 | 20 | 40 | 30,0 | 102 | 25,8 | 0,59 | 2,02 | 0,51 | 50,7 | 0,67 | 0,66 | **EN12900 LBP** |
| [°F] | -31 | 104 | 68 | 104 | | | | | | | | | | |
| [°C] | -10 | 45 | 20 | 45 | 126,8 | 433 | 109,2 | 1,36 | 4,66 | 1,17 | 93,0 | 0,75 | 2,97 | **EN12900 MBP** |
| [°F] | 14 | 113 | 68 | 113 | | | | | | | | | | |
| [°C] | 5 | 50 | 20 | 50 | 223,6 | 764 | 192,5 | 1,74 | 5,95 | 1,50 | 128,4 | 0,86 | 5,64 | **EN12900 HBP** |
| [°F] | 41 | 122 | 68 | 122 | | | | | | | | | | |

**Performance tables** R134a, 220V/50Hz, CSIR, static, CCC, EAC, UL, EN 60335-2-34

| | pe [°C] | pe [°F] | Cooling capacity [W] | [Btu/h] | [kcal/h] | COP [W/W] | EER [Btu/Wh] | [kcal/Wh] | P1 [W] | I [A] | m [kg/h] |
|---|---|---|---|---|---|---|---|---|---|---|---|
| [°C / °F] | -30 | -22 | 39,1 | 133 | 33,6 | 0,68 | 2,34 | 0,59 | 57,1 | 0,68 | 0,84 |
| cond. pressure | -25 | -13 | 56,2 | 192 | 48,4 | 0,86 | 2,95 | 0,74 | 65,0 | 0,69 | 1,22 |
| pc= 45/113 | -15 | 5 | 101,9 | 348 | 87,7 | 1,23 | 4,19 | 1,06 | 83,1 | 0,73 | 2,22 |
| return gas temp. | -10 | 14 | 131,6 | 449 | 113,3 | 1,41 | 4,83 | 1,22 | 93,0 | 0,75 | 2,88 |
| RGT= 32/90 | 0 | 32 | 207,9 | 710 | 178,9 | 1,82 | 6,23 | 1,57 | 113,9 | 0,81 | 4,60 |
| liquid temp | 5 | 41 | 255,7 | 873 | 220,0 | 2,05 | 7,00 | 1,76 | 124,7 | 0,85 | 5,69 |
| Tliq= 45/113 | 15 | 59 | 373,7 | 1276 | 321,6 | 2,55 | 8,73 | 2,20 | 146,3 | 0,93 | 8,46 |
| [°C / °F] | -30 | -22 | 25,3 | 87 | 21,8 | 0,44 | 1,50 | 0,38 | 57,7 | 0,68 | 0,60 |
| cond. pressure | -25 | -13 | 40,9 | 140 | 35,2 | 0,62 | 2,12 | 0,53 | 65,8 | 0,70 | 0,98 |
| pc= 55/131 | -15 | 5 | 80,5 | 275 | 69,3 | 0,95 | 3,23 | 0,81 | 85,2 | 0,74 | 1,94 |
| return gas temp | -10 | 14 | 105,8 | 361 | 91,0 | 1,10 | 3,76 | 0,95 | 96,2 | 0,77 | 2,56 |
| RGT= 32/90 | 0 | 32 | 170,4 | 582 | 146,7 | 1,42 | 4,85 | 1,22 | 120,1 | 0,84 | 4,17 |
| liquid temp | 5 | 41 | 211,0 | 721 | 181,6 | 1,59 | 5,42 | 1,37 | 132,8 | 0,88 | 5,20 |
| Tliq= 55/131 | 15 | 59 | 311,7 | 1065 | 268,3 | 1,96 | 6,69 | 1,69 | 159,1 | 0,97 | 7,83 |

## Model

| Designation | TL3G | 220-240V/50Hz | Conf. 2 | Sales code: | 102G4353 |
|---|---|---|---|---|---|

## Configuration

| | |
|---|---|
| Motorconfiguration | RSIR |
| Power supply (nominal) | 220-240V/50Hz 1~ |
| Refrigerant | R134a |
| Application | LBP+MBP+HBP |
| Voltage range | 187-254V |
| Starting torque | LST |
| Approvals | CCC |
| | EAC |
| | UL |
| | EN 60335-2-34 |

## Electrical accessories / wiring diagram

**RSIR**

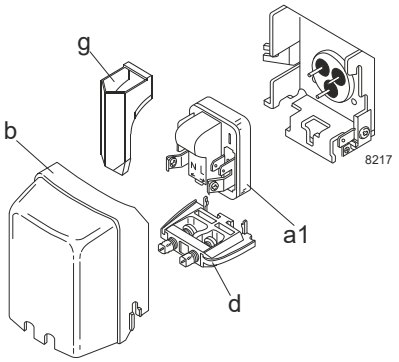


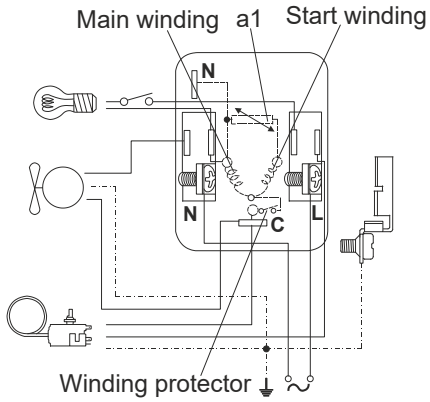


## Ambient temperatures / system cooling

| | |
|---|---|
| Ambient temperature min.: | 10°C / 50°F |
| Ambient temperature max.: | 43°C / 110°F |

**System cooling** (n/a: outside limits)

| T ambient | LBP | MBP | HBP |
|---|---|---|---|
| 32°C / 90°F | static | static | fan 3m/s |
| 38°C / 100°F | static | static | fan 3m/s |
| 43°C / 110°F | static | static | fan 3m/s |

## Operation pressure range

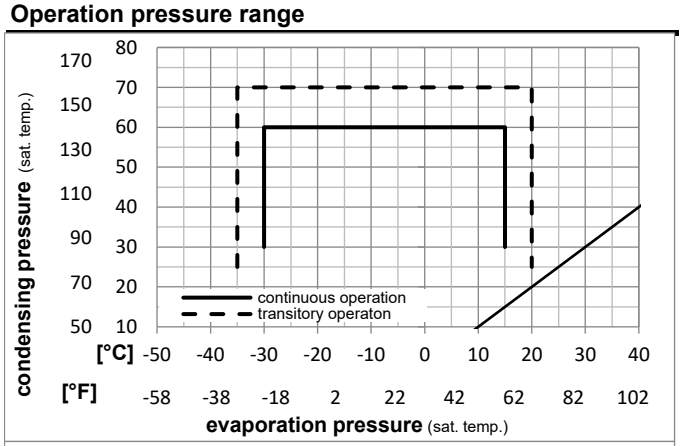


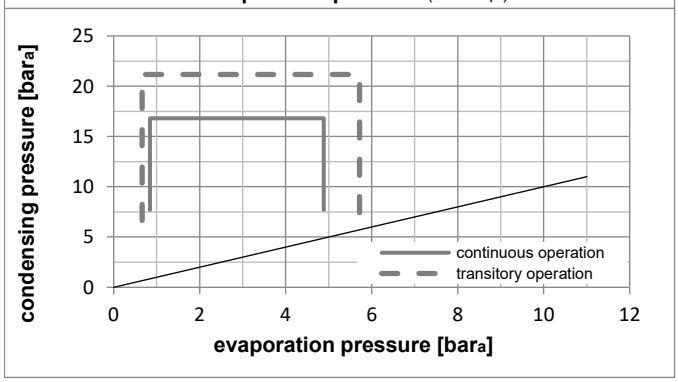


Components

| | | |
|---|---|---|
| a1 | PTC starter (220V, 25Ohm, 4.8mm) | 103N0018 |
| b | plastic cover | 103N2010 |
| d | cord relief | 103N1010 |
| g | protection screen for PTC | 103N0476 |

Alternative components

| | | |
|---|---|---|
| a1 | PTC starter (220V, 25Ohm, 6.3mm) | 103N0011 |
| b | plastic cover | 103N2011 |
| d | cord relief | 103N1010 |
| g | protection screen for PTC | 103N0476 |

**Model**

| Designation | TL3G | 220-240V/50Hz | Conf. 2 | Sales code: | 102G4353 |
|---|---|---|---|---|---|

**Optimization + standard conditions** R134a, 220V/50Hz, RSIR, static, CCC, EAC, UL, EN 60335-2-34

| | pe (Evaporating pressure (saturation temperature)) | pc (Condensing pressure (saturation temperature)) | RGT (Return gas temp.) | Tliq (Liquid temp.) | Cooling capacity [W] | [Btu/h] | [kcal/h] | COP [W/W] | EER [Btu/Wh] | [kcal/Wh] | P1 (Power consumption) [W] | I (Current consumption) [A] | ṁ (Ref. mass flow) [kg/h] | |
|---|---|---|---|---|---|---|---|---|---|---|---|---|---|---|
| [°C] | -23 | 54 | 32 | 32 | 58,3 | 199 | 50,1 | 0,85 | 2,90 | 0,73 | 68,6 | 0,70 | 1,13 | ASHRAE LBP |
| [°F] | -10 | 130 | 90 | 90 | | | | | | | | | | |
| [°C] | -7 | 54 | 35 | 46 | 139,2 | 475 | 119,8 | 1,34 | 4,59 | 1,16 | 103,6 | 0,79 | 3,04 | ASHRAE MBP |
| [°F] | 20 | 130 | 95 | 115 | | | | | | | | | | |
| [°C] | 7,2 | 54 | 35 | 46 | 257,1 | 878 | 221,3 | 1,86 | 6,36 | 1,60 | 138,0 | 0,89 | 5,70 | ASHRAE HBP |
| [°F] | 45 | 130 | 95 | 115 | | | | | | | | | | |
| [°C] | -35 | 40 | 20 | 40 | 30,0 | 102 | 25,8 | 0,59 | 2,02 | 0,51 | 50,7 | 0,67 | 0,66 | EN12900 LBP |
| [°F] | -31 | 104 | 68 | 104 | | | | | | | | | | |
| [°C] | -10 | 45 | 20 | 45 | 126,8 | 433 | 109,2 | 1,36 | 4,66 | 1,17 | 93,0 | 0,75 | 2,97 | EN12900 MBP |
| [°F] | 14 | 113 | 68 | 113 | | | | | | | | | | |
| [°C] | 5 | 50 | 20 | 50 | 223,6 | 764 | 192,5 | 1,74 | 5,95 | 1,50 | 128,4 | 0,86 | 5,64 | EN12900 HBP |
| [°F] | 41 | 122 | 68 | 122 | | | | | | | | | | |

**Performance tables** R134a, 220V/50Hz, RSIR, static, CCC, EAC, UL, EN 60335-2-34

| | pe [°C] | pe [°F] | Cooling capacity [W] | [Btu/h] | [kcal/h] | COP [W/W] | EER [Btu/Wh] | [kcal/Wh] | P1 [W] | I [A] | m [kg/h] |
|---|---|---|---|---|---|---|---|---|---|---|---|
| [°C / °F] | -30 | -22 | 39,1 | 133 | 33,6 | 0,68 | 2,34 | 0,59 | 57,1 | 0,68 | 0,84 |
| cond. pressure | -25 | -13 | 56,2 | 192 | 48,4 | 0,86 | 2,95 | 0,74 | 65,0 | 0,69 | 1,22 |
| pc= 45/113 | -15 | 5 | 101,9 | 348 | 87,7 | 1,23 | 4,19 | 1,06 | 83,1 | 0,73 | 2,22 |
| return gas temp. | -10 | 14 | 131,6 | 449 | 113,3 | 1,41 | 4,83 | 1,22 | 93,0 | 0,75 | 2,88 |
| RGT= 32/90 | 0 | 32 | 207,9 | 710 | 178,9 | 1,82 | 6,23 | 1,57 | 113,9 | 0,81 | 4,60 |
| liquid temp | 5 | 41 | 255,7 | 873 | 220,0 | 2,05 | 7,00 | 1,76 | 124,7 | 0,85 | 5,69 |
| Tliq= 45/113 | 15 | 59 | 373,7 | 1276 | 321,6 | 2,55 | 8,73 | 2,20 | 146,3 | 0,93 | 8,46 |
| [°C / °F] | -30 | -22 | 25,3 | 87 | 21,8 | 0,44 | 1,50 | 0,38 | 57,7 | 0,68 | 0,60 |
| cond. pressure | -25 | -13 | 40,9 | 140 | 35,2 | 0,62 | 2,12 | 0,53 | 65,8 | 0,70 | 0,98 |
| pc= 55/131 | -15 | 5 | 80,5 | 275 | 69,3 | 0,95 | 3,23 | 0,81 | 85,2 | 0,74 | 1,94 |
| return gas temp | -10 | 14 | 105,8 | 361 | 91,0 | 1,10 | 3,76 | 0,95 | 96,2 | 0,77 | 2,56 |
| RGT= 32/90 | 0 | 32 | 170,4 | 582 | 146,7 | 1,42 | 4,85 | 1,22 | 120,1 | 0,84 | 4,17 |
| liquid temp | 5 | 41 | 211,0 | 721 | 181,6 | 1,59 | 5,42 | 1,37 | 132,8 | 0,88 | 5,20 |
| Tliq= 55/131 | 15 | 59 | 311,7 | 1065 | 268,3 | 1,96 | 6,69 | 1,69 | 159,1 | 0,97 | 7,83 |

## Model

| Designation | TL3G | 208-230V/60Hz | Conf. 3 | Sales code: | 102G4353 |
|---|---|---|---|---|---|

## Configuration

| | |
|---|---|
| Motorconfiguration | CSIR |
| Power supply (nominal) | 208-230V/60Hz 1~ |
| Refrigerant | R134a |
| Application | LBP |
| Voltage range | 198-254V |
| Starting torque | HST |
| Approvals | CCC |
| | EAC |
| | UL |
| | EN 60335-2-34 |

## Ambient temperatures / system cooling

| | |
|---|---|
| Ambient temperature min.: | 10°C / 50°F |
| Ambient temperature max.: | 43°C / 110°F |

**System cooling** (n/a: outside limits)

| T ambient | LBP | MBP | HBP |
|---|---|---|---|
| 32°C / 90°F | static | n/a | n/a |
| 38°C / 100°F | static | n/a | n/a |
| 43°C / 110°F | static | n/a | n/a |

## Operation pressure range

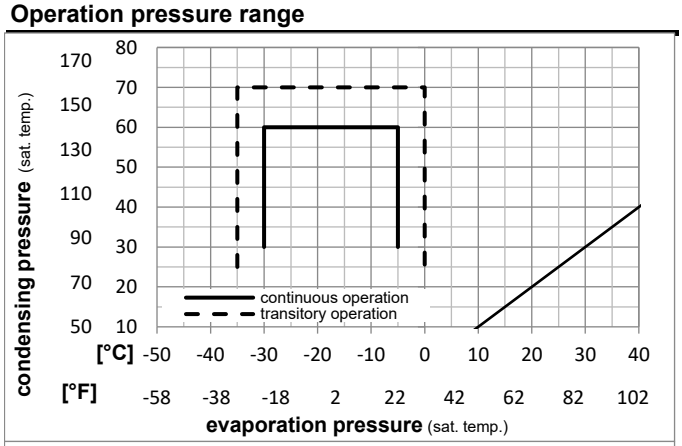


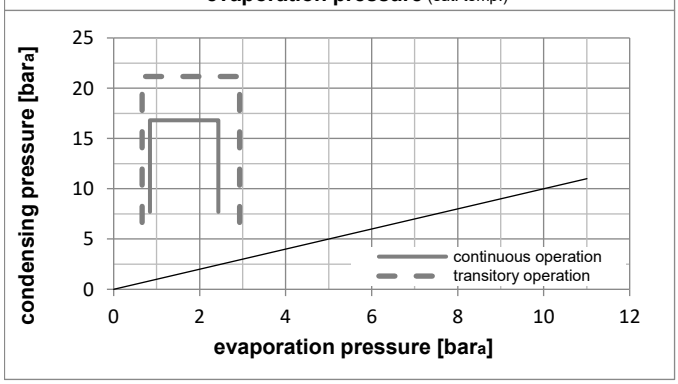


## Electrical accessories / wiring diagram

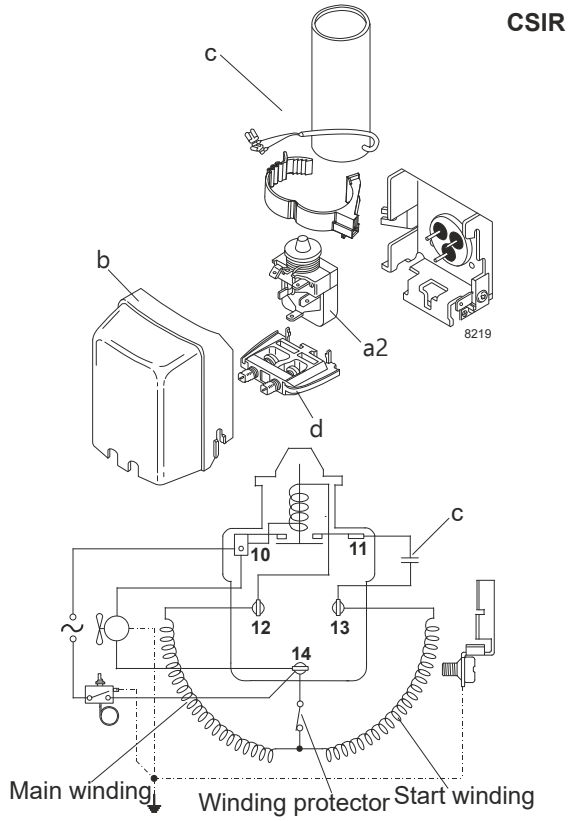


Components

| | | |
|---|---|---|
| a2 | assy. relay | 117U6009 |
| c | start capacitor (60µF) | 117U5014 |
| b | plastic cover | 103N2010 |
| d | cord relief | 103N1010 |

Alternative components

| | | |
|---|---|---|
| b | plastic cover | 103N2011 |

**Model**

| Designation | TL3G | 208-230V/60Hz | Conf. 3 | Sales code: | 102G4353 |
|---|---|---|---|---|---|

**Optimization + standard conditions** R134a, 220V/60Hz, CSIR, static, CCC, EAC, UL, EN 60335-2-34

| | Evaporating pressure (saturation temperature) pe | Condensing pressure (saturation temperature) pc | Return gas temp. RGT | Liquid temp. Tliq | Cooling capacity [W] | [Btu/h] | [kcal/h] | COP [W/W] | EER [Btu/Wh] | [kcal/Wh] | Power consumption P1 [W] | Current consumption I [A] | Ref. mass flow ṁ [kg/h] | |
|---|---|---|---|---|---|---|---|---|---|---|---|---|---|---|
| [°C] | -23 | 54 | 32 | 32 | 67,5 | 231 | 58,1 | 0,92 | 3,15 | 0,79 | 73,2 | 0,64 | 1,31 | ASHRAE LBP |
| [°F] | -10 | 130 | 90 | 90 | | | | | | | | | | |
| [°C] | -7 | 54 | 35 | 46 | 164,6 | 562 | 141,6 | 1,35 | 4,59 | 1,16 | 122,3 | 0,77 | 3,59 | ASHRAE MBP |
| [°F] | 20 | 130 | 95 | 115 | | | | | | | | | | |
| [°C] | 7,2 | 54 | 35 | 46 | 304,4 | 1040 | 262,0 | 1,67 | 5,71 | 1,44 | 182,1 | 0,91 | 6,75 | ASHRAE HBP |
| [°F] | 45 | 130 | 95 | 115 | | | | | | | | | | |
| [°C] | -35 | 40 | 20 | 40 | 34,9 | 119 | 30,1 | 0,65 | 2,22 | 0,56 | 53,8 | 0,57 | 0,77 | EN12900 LBP |
| [°F] | -31 | 104 | 68 | 104 | | | | | | | | | | |
| [°C] | -10 | 45 | 20 | 45 | 145,5 | 497 | 125,2 | 1,38 | 4,72 | 1,19 | 105,2 | 0,73 | 3,41 | EN12900 MBP |
| [°F] | 14 | 113 | 68 | 113 | | | | | | | | | | |
| [°C] | 5 | 50 | 20 | 50 | 258,1 | 882 | 222,1 | 1,58 | 5,38 | 1,36 | 163,9 | 0,88 | 6,50 | EN12900 HBP |
| [°F] | 41 | 122 | 68 | 122 | | | | | | | | | | |

**Performance tables** R134a, 220V/60Hz, CSIR, static, CCC, EAC, UL, EN 60335-2-34

| | pe [°C] | [°F] | Cooling capacity [W] | [Btu/h] | [kcal/h] | COP [W/W] | EER [Btu/Wh] | [kcal/Wh] | P1 [W] | I [A] | m [kg/h] |
|---|---|---|---|---|---|---|---|---|---|---|---|
| [°C / °F] | -30 | -22 | 45,3 | 155 | 38,9 | 0,75 | 2,58 | 0,65 | 60,0 | 0,60 | 0,98 |
| cond. pressure | -25 | -13 | 65,1 | 222 | 56,0 | 0,94 | 3,22 | 0,81 | 68,9 | 0,62 | 1,41 |
| pc= 45/113 | -23 | -10 | 72,7 | 248 | 62,6 | 1,00 | 3,43 | 0,86 | 72,3 | 0,63 | 1,58 |
| return gas temp. | -20 | -4 | 88,9 | 304 | 76,5 | 1,12 | 3,82 | 0,96 | 79,4 | 0,66 | 1,93 |
| RGT= 32/90 | -15 | 5 | 117,4 | 401 | 101,0 | 1,28 | 4,38 | 1,10 | 91,5 | 0,69 | 2,56 |
| liquid temp | -10 | 14 | 151,0 | 516 | 129,9 | 1,44 | 4,90 | 1,24 | 105,2 | 0,73 | 3,30 |
| Tliq= 45/113 | -5 | 23 | 190,3 | 650 | 163,8 | 1,58 | 5,39 | 1,36 | 120,7 | 0,78 | 4,19 |
| [°C / °F] | -30 | -22 | 29,5 | 101 | 25,4 | 0,49 | 1,68 | 0,42 | 60,0 | 0,60 | 0,70 |
| cond. pressure | -25 | -13 | 47,4 | 162 | 40,8 | 0,68 | 2,32 | 0,58 | 69,7 | 0,63 | 1,13 |
| pc= 55/131 | -23 | -10 | 54,3 | 185 | 46,7 | 0,74 | 2,52 | 0,64 | 73,5 | 0,64 | 1,30 |
| return gas temp | -20 | -4 | 68,9 | 235 | 59,3 | 0,85 | 2,89 | 0,73 | 81,4 | 0,66 | 1,65 |
| RGT= 32/90 | -15 | 5 | 94,6 | 323 | 81,4 | 0,99 | 3,39 | 0,86 | 95,2 | 0,70 | 2,28 |
| liquid temp | -10 | 14 | 125,1 | 427 | 107,7 | 1,13 | 3,85 | 0,97 | 111,1 | 0,74 | 3,03 |
| Tliq= 55/131 | -5 | 23 | 160,9 | 550 | 138,5 | 1,25 | 4,25 | 1,07 | 129,2 | 0,79 | 3,91 |

## Model

| Designation | TL3G | 208-230V/60Hz | Conf. 4 | Sales code: | 102G4353 |
|---|---|---|---|---|---|

## Configuration

| | |
|---|---|
| Motorconfiguration | RSIR |
| Power supply (nominal) | 208-230V/60Hz 1~ |
| Refrigerant | R134a |
| Application | LBP |
| Voltage range | 198-254V |
| Starting torque | LST |
| Approvals | CCC |
| | EAC |
| | UL |
| | EN 60335-2-34 |

## Ambient temperatures / system cooling

| | |
|---|---|
| Ambient temperature min.: | 10°C / 50°F |
| Ambient temperature max.: | 43°C / 110°F |

| System cooling (n/a: outside limits) | | | |
|---|---|---|---|
| T ambient | LBP | MBP | HBP |
| 32°C / 90°F | static | n/a | n/a |
| 38°C / 100°F | static | n/a | n/a |
| 43°C / 110°F | static | n/a | n/a |

## Operation pressure range

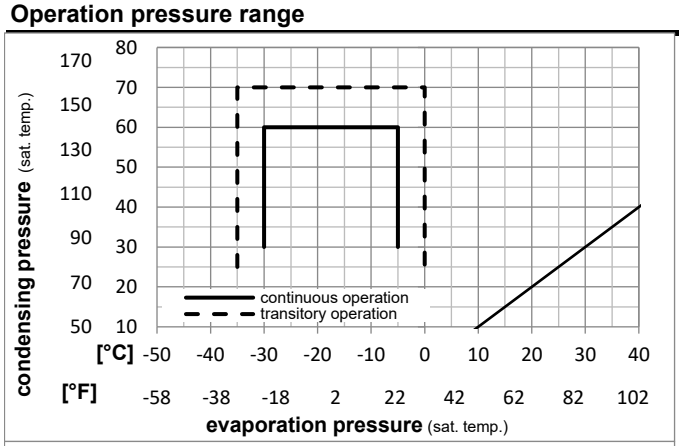


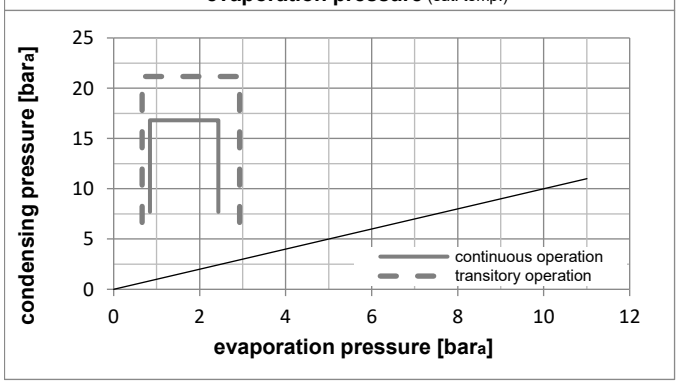


## Electrical accessories / wiring diagram

RSIR

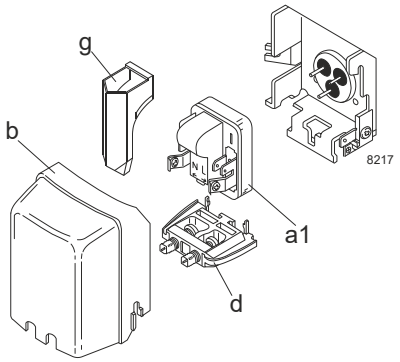


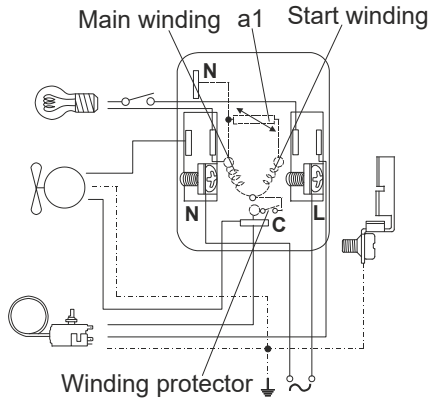


Components

| | | |
|---|---|---|
| a1 | PTC starter (220V, 25Ohm, 4.8mm) | 103N0018 |
| b | plastic cover | 103N2010 |
| d | cord relief | 103N1010 |
| g | protection screen for PTC | 103N0476 |

Alternative components

| | | |
|---|---|---|
| a1 | PTC starter (220V, 25Ohm, 6.3mm) | 103N0011 |
| b | plastic cover | 103N2011 |
| d | cord relief | 103N1010 |
| g | protection screen for PTC | 103N0476 |

**Model**

| Designation | TL3G | 208-230V/60Hz | Conf. 4 | Sales code: | 102G4353 |
|---|---|---|---|---|---|

**Optimization + standard conditions** R134a, 220V/60Hz, RSIR, static, CCC, EAC, UL, EN 60335-2-34

| | pe (Evaporating pressure (saturation temperature)) | pc (Condensing pressure (saturation temperature)) | RGT (Return gas temp.) | Tliq (Liquid temp.) | Cooling capacity [W] | [Btu/h] | [kcal/h] | COP [W/W] | EER [Btu/Wh] | [kcal/Wh] | P1 (Power consumption) [W] | I (Current consumption) [A] | ṁ (Ref. mass flow) [kg/h] | |
|---|---|---|---|---|---|---|---|---|---|---|---|---|---|---|
| [°C] | -23 | 54 | 32 | 32 | 67,5 | 231 | 58,1 | 0,92 | 3,15 | 0,79 | 73,2 | 0,64 | 1,31 | ASHRAE LBP |
| [°F] | -10 | 130 | 90 | 90 | | | | | | | | | | |
| [°C] | -7 | 54 | 35 | 46 | 164,6 | 562 | 141,6 | 1,35 | 4,59 | 1,16 | 122,3 | 0,77 | 3,59 | ASHRAE MBP |
| [°F] | 20 | 130 | 95 | 115 | | | | | | | | | | |
| [°C] | 7,2 | 54 | 35 | 46 | 304,4 | 1040 | 262,0 | 1,67 | 5,71 | 1,44 | 182,1 | 0,91 | 6,75 | ASHRAE HBP |
| [°F] | 45 | 130 | 95 | 115 | | | | | | | | | | |
| [°C] | -35 | 40 | 20 | 40 | 34,9 | 119 | 30,1 | 0,65 | 2,22 | 0,56 | 53,8 | 0,57 | 0,77 | EN12900 LBP |
| [°F] | -31 | 104 | 68 | 104 | | | | | | | | | | |
| [°C] | -10 | 45 | 20 | 45 | 145,5 | 497 | 125,2 | 1,38 | 4,72 | 1,19 | 105,2 | 0,73 | 3,41 | EN12900 MBP |
| [°F] | 14 | 113 | 68 | 113 | | | | | | | | | | |
| [°C] | 5 | 50 | 20 | 50 | 258,1 | 882 | 222,1 | 1,58 | 5,38 | 1,36 | 163,9 | 0,88 | 6,50 | EN12900 HBP |
| [°F] | 41 | 122 | 68 | 122 | | | | | | | | | | |

**Performance tables** R134a, 220V/60Hz, RSIR, static, CCC, EAC, UL, EN 60335-2-34

| | pe [°C] | pe [°F] | Cooling capacity [W] | [Btu/h] | [kcal/h] | COP [W/W] | EER [Btu/Wh] | [kcal/Wh] | P1 [W] | I [A] | m [kg/h] |
|---|---|---|---|---|---|---|---|---|---|---|---|
| [°C / °F] | -30 | -22 | 45,3 | 155 | 38,9 | 0,75 | 2,58 | 0,65 | 60,0 | 0,60 | 0,98 |
| cond. pressure | -25 | -13 | 65,1 | 222 | 56,0 | 0,94 | 3,22 | 0,81 | 68,9 | 0,62 | 1,41 |
| pc= 45/113 | -23 | -10 | 72,7 | 248 | 62,6 | 1,00 | 3,43 | 0,86 | 72,3 | 0,63 | 1,58 |
| return gas temp. | -20 | -4 | 88,9 | 304 | 76,5 | 1,12 | 3,82 | 0,96 | 79,4 | 0,66 | 1,93 |
| RGT= 32/90 | -15 | 5 | 117,4 | 401 | 101,0 | 1,28 | 4,38 | 1,10 | 91,5 | 0,69 | 2,56 |
| liquid temp | -10 | 14 | 151,0 | 516 | 129,9 | 1,44 | 4,90 | 1,24 | 105,2 | 0,73 | 3,30 |
| Tliq= 45/113 | -5 | 23 | 190,3 | 650 | 163,8 | 1,58 | 5,39 | 1,36 | 120,7 | 0,78 | 4,19 |
| [°C / °F] | -30 | -22 | 29,5 | 101 | 25,4 | 0,49 | 1,68 | 0,42 | 60,0 | 0,60 | 0,70 |
| cond. pressure | -25 | -13 | 47,4 | 162 | 40,8 | 0,68 | 2,32 | 0,58 | 69,7 | 0,63 | 1,13 |
| pc= 55/131 | -23 | -10 | 54,3 | 185 | 46,7 | 0,74 | 2,52 | 0,64 | 73,5 | 0,64 | 1,30 |
| return gas temp | -20 | -4 | 68,9 | 235 | 59,3 | 0,85 | 2,89 | 0,73 | 81,4 | 0,66 | 1,65 |
| RGT= 32/90 | -15 | 5 | 94,6 | 323 | 81,4 | 0,99 | 3,39 | 0,86 | 95,2 | 0,70 | 2,28 |
| liquid temp | -10 | 14 | 125,1 | 427 | 107,7 | 1,13 | 3,85 | 0,97 | 111,1 | 0,74 | 3,03 |
| Tliq= 55/131 | -5 | 23 | 160,9 | 550 | 138,5 | 1,25 | 4,25 | 1,07 | 129,2 | 0,79 | 3,91 |