Technical Data Compressor

SECOP

Model

Designation	**TL5G**	**220-240V/50Hz 1~**	**208-230V/60Hz 1~**	Sales code:	**102G4550**

Compressor design

Oil type	Polyolester	Refrigerant(s)	**R134a, R513A**
Oil viscosity	15cST	Displacement	5,08cm³ / 0,31cu.in
Oil quantity	285cm³ / 9,7fl.oz	Compressors on pallet	125
Refr. charge - tech. limit	400g / 14,1oz		
Free gas volume comp.	1690cm³ / 57,1fl.oz		
Weight	7,5kg / 16,5lbs		
Motor protection	1# internal		
Winding resistance main	14,5Ω (at 25°C)		
Winding resistance aux	14,8Ω (at 25°C)		
Max. winding temp.	125°C / 257°F		
Max. discharge temp.	130°C / 266°F		

General - Configurations with TL5G

	Conf. 1	**Conf. 2**	**Conf. 3**	**Conf. 4**	**Conf. 5**
Motorconfiguration	RSIR	CSIR	CSIR	CSIR	CSIR
Power supply (nominal)	220-240V/50Hz	220-240V/50Hz	208-230V/60Hz	220-240V/50Hz	208-230V/60Hz
Number of phases	1	1	1	1	1
Voltage range	187-254V	187-254V	198-254V	187-254V	198-253V
Approvals	VDE, CCC, EAC	VDE, CCC, EAC	VDE, CCC, EAC	VDE, CCC	VDE, CCC
Starting torque	LST	HST	HST	HST	HST
Note	- / -				

Applications with TL5G

	Conf. 1	**Conf. 2**	**Conf. 3**	**Conf. 4**	**Conf. 5**
Refrigerant	R134a	R134a	R134a	R513A	R513A
Application	LBP+MBP+HBP	LBP+MBP+HBP	LBP	LBP+MBP+HBP	LBP
System cooling	static	static	static	static	static
Hot gas defrost	OK	OK	OK	OK	OK
Long interval pull down	OK	OK	OK	OK	OK

Electrical data - Configurations with TL5G

	Conf. 1	**Conf. 2**	**Conf. 3**	**Conf. 4**	**Conf. 5**
Starting device type	PTC	relay	relay	relay	relay
Run capacitor	-/-	-/-	-/-	-/-	-/-
Start capacitor	-/-	60µF	60µF	60µF	60µF
LRA (locked rotor amps / 4s)	5,4A	5,7A	5,7A	5,7A	5,7A
RLA (rated load amps / 1s)	1,1A	1,1A	1,1A	1,1A	1,1A
Cut in current	9,7A	9,7A	9,7A	9,7A	9,7A

Model

Designation	TL5G	220-240V/50Hz 1~ 208-230V/60Hz 1~	Sales code:	102G4550

Compressor dimensions

Housing		
	A Height	174mm / 6,85in
	B Height	170mm / 6,69in
	C Length shell	176mm / 6,93in
	D Length w. cover	222mm / 8,74in
	E Width	157mm / 6,18in

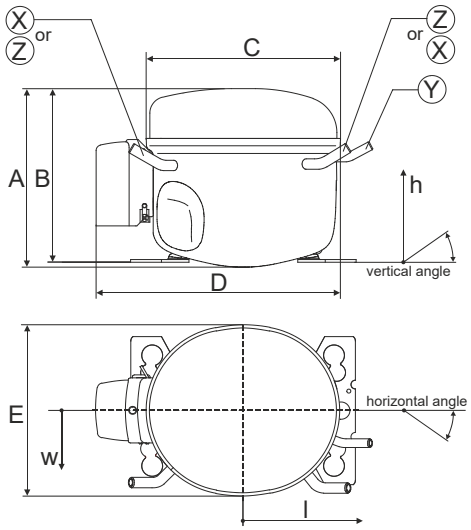

Connectors		Suction X	Discharge Y	Process Z
Diameter	[mm]	øi 6,11-6,29	øi 5,12-5,22	øi 6,11-6,29
(i:inside, o:outside)	[in]	øi 0,24-0,25	øi 0,2-0,21	øi 0,24-0,25
Material		copper	copper	copper
Horizontal angle	±2°	0°	0°	0°
Vertical angle	±2°	150°	28°	31,5°
Position l/h/w	[mm]	-102/105/66	117/108/30	96/105/71
	[in]	-4/4,1/2,6	4,6/4,3/1,2	3,8/4,1/2,8
Straight tube l.	[mm]	12	12	12
	[in]	0,5	0,5	0,5

Compressor fixation

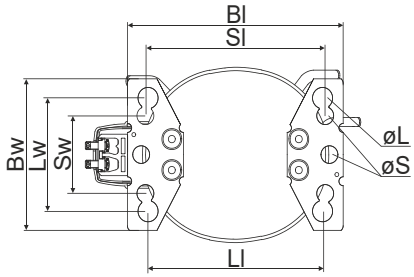

Baseplate	[mm]	[inch]
Bl	204	8.03
Bw	136	5.35

Large holes	[mm]	[inch]
Ll	165	6.5
Lw	101.6	4
øL	ø 19	ø 0.75

Small holes	[mm]	[inch]
Sl	170	6.7
Sw	70	2.76
øS	ø 16	ø 0.63

Bolt joint

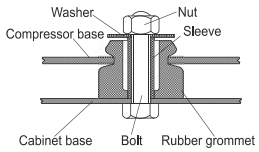

Snap-on

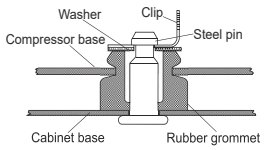

Mounting accessories	one comp.	multi pack
Bolt joint | M6 | ø16mm	118-1917	118-1918
Bolt joint | ø1/4" | ø16mm	118-1946	
Bolt joint | ø1/4" | ø19mm	118-1949	
Snap-on | ø7,3 | ø16mm	118-1947	118-1919

Model

Designation	TL5G	220-240V/50Hz	Conf. 1	Sales code:	102G4550

Configuration

Motorconfiguration	RSIR
Power supply (nominal)	220-240V/50Hz 1~
Refrigerant	R134a
Application	LBP+MBP+HBP
Voltage range	187-254V
Starting torque	LST
Approvals	VDE
	CCC
	EAC

Electrical accessories / wiring diagram

RSIR

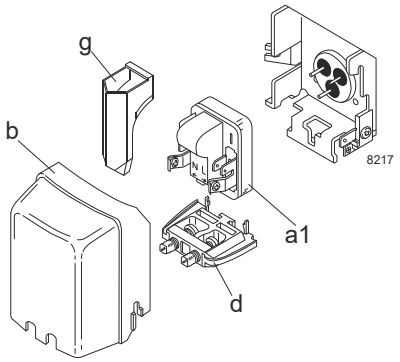

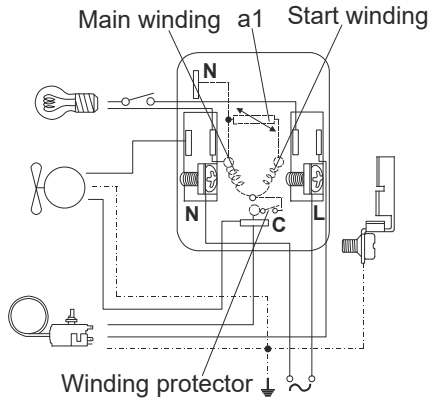

Ambient temperatures / system cooling

Ambient temperature min.:	10°C / 50°F
Ambient temperature max.:	43°C / 110°F

System cooling (n/a: outside limits)

T ambient	LBP	MBP	HBP
32°C / 90°F	static	static	fan 3m/s
38°C / 100°F	static	static	fan 3m/s
43°C / 110°F	static	static	fan 3m/s

Operation pressure range

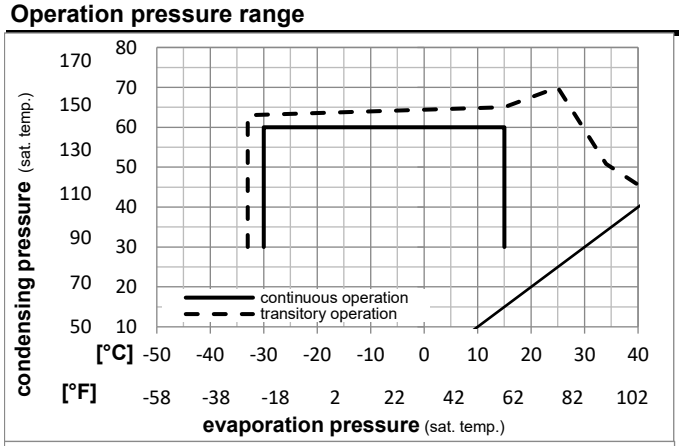

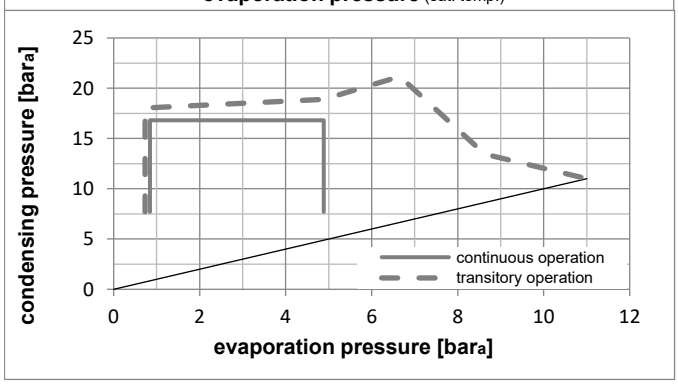

Components

a1	PTC starter (220V, 25Ohm, 4.8mm)	103N0018
b	plastic cover	103N2010
d	cord relief	103N1010
g	protection screen for PTC	103N0476

Alternative components

a1	PTC starter (220V, 25Ohm, 6.3mm)	103N0011
b	plastic cover	103N2011
d	cord relief	103N1010
g	protection screen for PTC	103N0476

Model

Designation				Sales code:
	TL5G	**220-240V/50Hz**	**Conf. 1**	**102G4550**

Optimization + standard conditions R134a, 220V/50Hz, RSIR, static, VDE, CCC, EAC

	pe (Evaporating pressure (saturation temperature))	pc (Condensing pressure (saturation temperature))	RGT (Return gas temp.)	Tliq (Liquid temp.)	Cooling capacity [W]	[Btu/h]	[kcal/h]	COP [W/W]	EER [Btu/Wh]	[kcal/Wh]	P1 (Power consumption) [W]	I (Current consumption) [A]	ṁ (Ref. mass flow) [kg/h]	
[°C]	-23	54	32	32	108,5	371	93,4	1,03	3,53	0,89	105,1	0,98	2,11	**ASHRAE LBP**
[°F]	-10	130	90	90										
[°C]	-25	55	32	55	79,0	270	68,0	0,79	2,70	0,68	100,0	0,98	1,89	**cecomaf LBP**
[°F]	-13	131	90	131										
[°C]	-35	40	20	40	53,6	183	46,2	0,74	2,52	0,64	72,6	0,96	1,18	**EN12900 LBP**
[°F]	-31	104	68	104										
[°C]	-7	54	35	46	230,4	787	198,3	1,43	4,90	1,23	160,6	1,13	5,03	**ASHRAE MBP**
[°F]	20	130	95	115										
[°C]	-10	55	32	55	178,3	609	153,5	1,19	4,07	1,03	149,5	1,09	4,31	**cecomaf MBP**
[°F]	14	131	90	131										
[°C]	-10	45	20	45	200,4	684	172,4	1,42	4,86	1,23	140,7	1,05	4,69	**EN12900 MBP**
[°F]	14	113	68	113										

Performance tables R134a, 220V/50Hz, RSIR, static, VDE, CCC, EAC

	pe [°C]	pe [°F]	Cooling capacity [W]	[Btu/h]	[kcal/h]	COP [W/W]	EER [Btu/Wh]	[kcal/Wh]	P1 [W]	I [A]	m [kg/h]
[°C / °F]	-30	-22	69,7	238	60,0	0,82	2,81	0,71	84,7	0,95	1,51
cond. pressure	-25	-13	95,2	325	81,9	0,97	3,32	0,84	98,0	0,97	2,06
pc= 45/113	-15	5	163,4	558	140,6	1,30	4,43	1,12	126,0	1,02	3,56
return gas temp.	-10	14	207,9	710	178,9	1,48	5,05	1,27	140,7	1,05	4,55
RGT= 32/90	0	32	322,3	1101	277,4	1,88	6,41	1,62	171,7	1,15	7,13
liquid temp	5	41	394,1	1346	339,1	2,10	7,16	1,80	187,9	1,21	8,77
Tliq= 45/113	15	59	571,5	1952	491,8	2,57	8,79	2,22	222,0	1,36	12,94
[°C / °F]	-30	-22	55,6	190	47,9	0,66	2,24	0,56	84,8	0,95	1,33
cond. pressure	-25	-13	79,0	270	68,0	0,79	2,70	0,68	100,0	0,98	1,89
pc= 55/131	-15	5	139,4	476	120,0	1,05	3,60	0,91	132,4	1,05	3,36
return gas temp	-10	14	178,3	609	153,5	1,19	4,07	1,03	149,5	1,09	4,31
RGT= 32/90	0	32	278,1	950	239,4	1,50	5,12	1,29	185,6	1,21	6,80
liquid temp	5	41	340,9	1164	293,4	1,67	5,69	1,43	204,7	1,28	8,40
Tliq= 55/131	15	59	496,9	1697	427,6	2,03	6,93	1,75	244,8	1,45	12,48

Model

Designation	TL5G	220-240V/50Hz	Conf. 2	Sales code:	102G4550

Configuration

Motorconfiguration	CSIR
Power supply (nominal)	220-240V/50Hz 1~
Refrigerant	R134a
Application	LBP+MBP+HBP
Voltage range	187-254V
Starting torque	HST
Approvals	VDE
	CCC
	EAC

Electrical accessories / wiring diagram

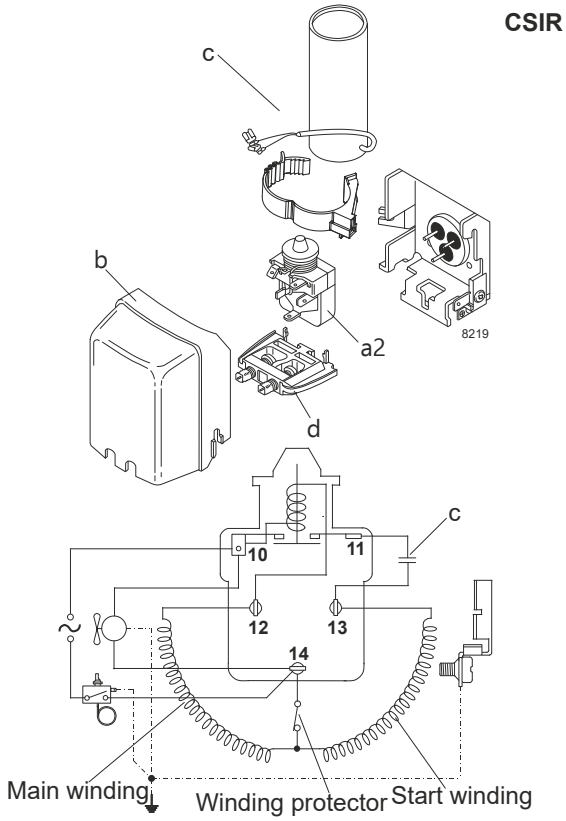

Components

a2	relay	117U6000
c	start capacitor (60µF)	117U5014
d	cord relief	103N1010
b	plastic cover	103N2010

Alternative components

b	plastic cover	103N2011

Ambient temperatures / system cooling

Ambient temperature min.:	10°C / 50°F
Ambient temperature max.:	43°C / 110°F

System cooling (n/a: outside limits)			
T ambient	LBP	MBP	HBP
32°C / 90°F	static	static	fan 3m/s
38°C / 100°F	static	static	fan 3m/s
43°C / 110°F	static	static	fan 3m/s

Operation pressure range

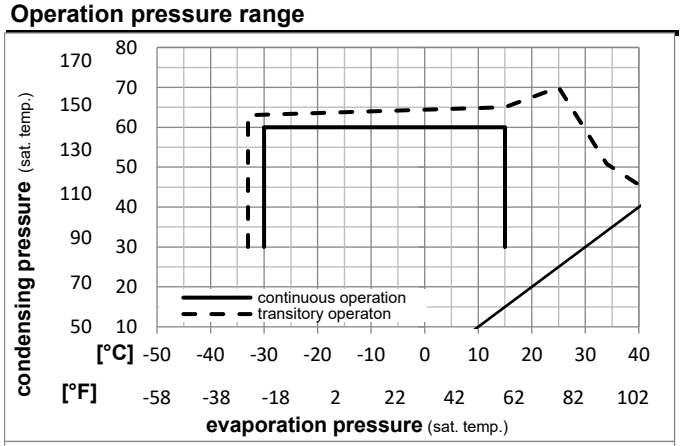

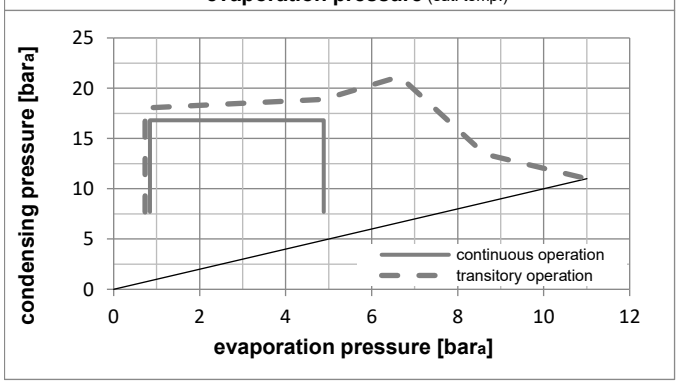

Model

Designation	TL5G	220-240V/50Hz	Conf. 2	Sales code:	102G4550

Optimization + standard conditions R134a, 220V/50Hz, CSIR, static, VDE, CCC, EAC

	pe (Evaporating pressure (saturation temperature))	pc (Condensing pressure (saturation temperature))	RGT (Return gas temp.)	Tliq (Liquid temp.)	Cooling capacity [W]	[Btu/h]	[kcal/h]	COP [W/W]	EER [Btu/Wh]	[kcal/Wh]	P1 (Power consumption) [W]	I (Current consumption) [A]	ṁ (Ref. mass flow) [kg/h]	
[°C]	-23	54	32	32	108,5	371	93,4	1,03	3,53	0,89	105,1	0,98	2,11	ASHRAE LBP
[°F]	-10	130	90	90										
[°C]	-25	55	32	55	79,0	270	68,0	0,79	2,70	0,68	100,0	0,98	1,89	cecomaf LBP
[°F]	-13	131	90	131										
[°C]	-35	40	20	40	53,6	183	46,2	0,74	2,52	0,64	72,6	0,96	1,18	EN12900 LBP
[°F]	-31	104	68	104										
[°C]	-7	54	35	46	230,4	787	198,3	1,43	4,90	1,23	160,6	1,13	5,03	ASHRAE MBP
[°F]	20	130	95	115										
[°C]	-10	55	32	55	178,3	609	153,5	1,19	4,07	1,03	149,5	1,09	4,31	cecomaf MBP
[°F]	14	131	90	131										
[°C]	-10	45	20	45	200,4	684	172,4	1,42	4,86	1,23	140,7	1,05	4,69	EN12900 MBP
[°F]	14	113	68	113										

Performance tables R134a, 220V/50Hz, CSIR, static, VDE, CCC, EAC

	pe [°C]	pe [°F]	Cooling capacity [W]	[Btu/h]	[kcal/h]	COP [W/W]	EER [Btu/Wh]	[kcal/Wh]	P1 [W]	I [A]	m [kg/h]
[°C / °F]	-30	-22	69,7	238	60,0	0,82	2,81	0,71	84,7	0,95	1,51
cond. pressure	-25	-13	95,2	325	81,9	0,97	3,32	0,84	98,0	0,97	2,06
pc= 45/113	-15	5	163,4	558	140,6	1,30	4,43	1,12	126,0	1,02	3,56
return gas temp.	-10	14	207,9	710	178,9	1,48	5,05	1,27	140,7	1,05	4,55
RGT= 32/90	0	32	322,3	1101	277,4	1,88	6,41	1,62	171,7	1,15	7,13
liquid temp	5	41	394,1	1346	339,1	2,10	7,16	1,80	187,9	1,21	8,77
Tliq= 45/113	15	59	571,5	1952	491,8	2,57	8,79	2,22	222,0	1,36	12,94
[°C / °F]	-30	-22	55,6	190	47,9	0,66	2,24	0,56	84,8	0,95	1,33
cond. pressure	-25	-13	79,0	270	68,0	0,79	2,70	0,68	100,0	0,98	1,89
pc= 55/131	-15	5	139,4	476	120,0	1,05	3,60	0,91	132,4	1,05	3,36
return gas temp	-10	14	178,3	609	153,5	1,19	4,07	1,03	149,5	1,09	4,31
RGT= 32/90	0	32	278,1	950	239,4	1,50	5,12	1,29	185,6	1,21	6,80
liquid temp	5	41	340,9	1164	293,4	1,67	5,69	1,43	204,7	1,28	8,40
Tliq= 55/131	15	59	496,9	1697	427,6	2,03	6,93	1,75	244,8	1,45	12,48

Model

Designation	TL5G	208-230V/60Hz	Conf. 3	Sales code:	102G4550

Configuration

Motorconfiguration	CSIR
Power supply (nominal)	208-230V/60Hz 1~
Refrigerant	R134a
Application	LBP
Voltage range	198-254V
Starting torque	HST
Approvals	VDE
	CCC
	EAC

Ambient temperatures / system cooling

Ambient temperature min.:	10°C / 50°F
Ambient temperature max.:	43°C / 110°F

System cooling (n/a: outside limits)

T ambient	LBP	MBP	HBP
32°C / 90°F	static	n/a	n/a
38°C / 100°F	static	n/a	n/a
43°C / 110°F	static	n/a	n/a

Operation pressure range

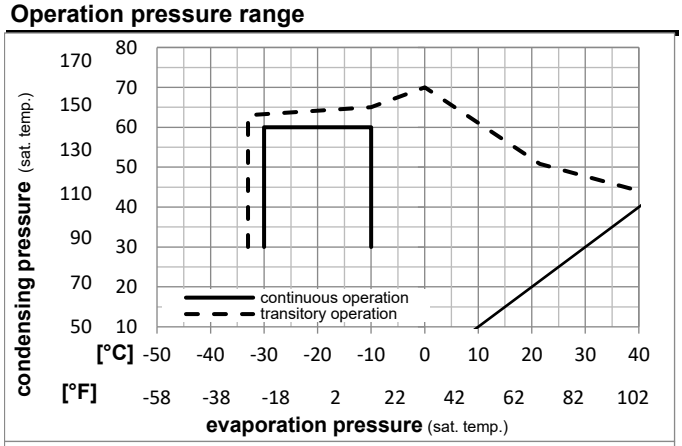

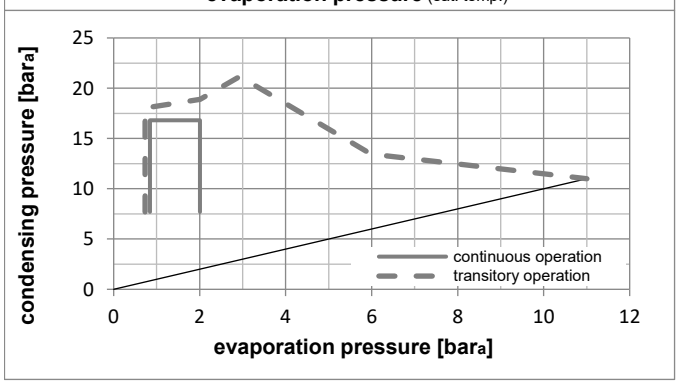

Electrical accessories / wiring diagram

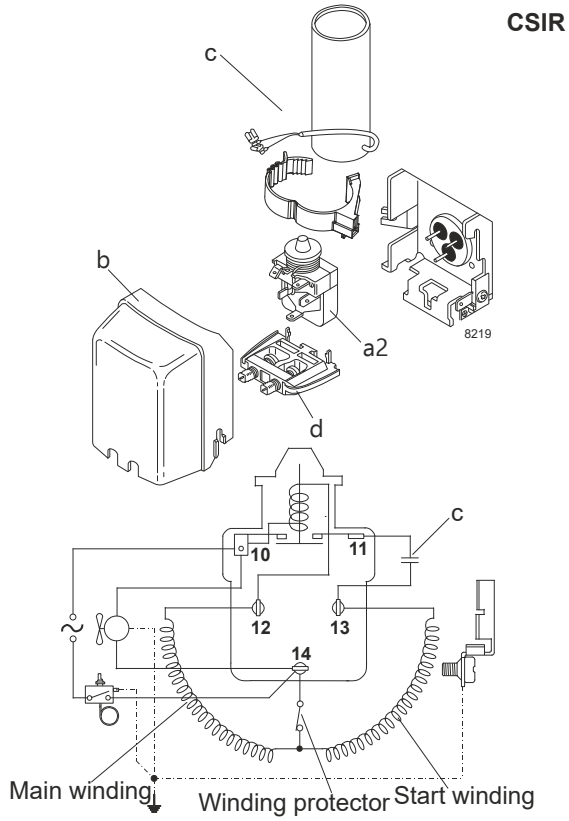

Components

a2	relay	117U6000
c	start capacitor (60µF)	117U5014
d	cord relief	103N1010
b	plastic cover	103N2010

Alternative components

b	plastic cover	103N2011

Model

Designation	TL5G	208-230V/60Hz	Conf. 3	Sales code:	102G4550

Optimization + standard conditions R134a, 230V/60Hz, CSIR, static, VDE, CCC, EAC

	pe (Evaporating pressure (saturation temperature))	pc (Condensing pressure (saturation temperature))	RGT (Return gas temp.)	Tliq (Liquid temp.)	Cooling capacity [W]	[Btu/h]	[kcal/h]	COP [W/W]	EER [Btu/Wh]	[kcal/Wh]	P1 (Power consumption) [W]	I (Current consumption) [A]	ṁ (Ref. mass flow) [kg/h]	
[°C]	-23	54	32	32	125,8	429	108,2	1,12	3,84	0,97	111,9	0,90	2,44	ASHRAE LBP
[°F]	-10	130	90	90										
[°C]	-25	55	32	55	91,5	312	78,7	0,87	2,95	0,74	105,7	0,88	2,19	cecomaf LBP
[°F]	-13	131	90	131										
[°C]	-35	40	20	40	64,1	219	55,1	0,85	2,90	0,73	75,5	0,81	1,41	EN12900 LBP
[°F]	-31	104	68	104										
[°C]	-7	54	35	46	267,0	912	229,8	1,45	4,94	1,24	184,8	1,13	5,83	ASHRAE MBP
[°F]	20	130	95	115										
[°C]	-10	55	32	55	206,8	706	178,0	1,22	4,16	1,05	169,8	1,08	5,00	cecomaf MBP
[°F]	14	131	90	131										
[°C]	-10	45	20	45	230,7	788	198,5	1,45	4,95	1,25	159,2	1,04	5,40	EN12900 MBP
[°F]	14	113	68	113										

Performance tables R134a, 230V/60Hz, CSIR, static, VDE, CCC, EAC

	pe [°C]	pe [°F]	Cooling capacity [W]	[Btu/h]	[kcal/h]	COP [W/W]	EER [Btu/Wh]	[kcal/Wh]	P1 [W]	I [A]	m [kg/h]
[°C / °F]	-30	-22	82,5	282	71,0	0,93	3,16	0,80	89,1	0,84	1,78
cond. pressure	-25	-13	111,9	382	96,3	1,06	3,64	0,92	105,1	0,87	2,43
pc= 45/113	-23	-10	123,3	421	106,1	1,11	3,79	0,96	110,9	0,89	2,67
return gas temp.	-20	-4	147,3	503	126,8	1,20	4,10	1,03	122,6	0,92	3,20
RGT= 32/90	-18	0	165,0	564	142,0	1,26	4,32	1,09	130,6	0,95	3,59
liquid temp	-15	5	189,5	647	163,1	1,35	4,60	1,16	140,8	0,98	4,13
Tliq= 45/113	-10	14	239,3	817	206,0	1,50	5,13	1,29	159,2	1,04	5,24
[°C / °F]	-30	-22	64,7	221	55,7	0,73	2,49	0,63	88,7	0,83	1,54
cond. pressure	-25	-13	91,5	312	78,7	0,87	2,95	0,74	105,7	0,88	2,19
pc= 55/131	-23	-10	101,7	347	87,5	0,91	3,10	0,78	112,1	0,90	2,43
return gas temp	-20	-4	123,5	422	106,3	0,99	3,36	0,85	125,3	0,94	2,96
RGT= 32/90	-18	0	139,5	476	120,0	1,04	3,54	0,89	134,6	0,97	3,35
liquid temp	-15	5	161,6	552	139,1	1,10	3,76	0,95	146,9	1,01	3,89
Tliq= 55/131	-10	14	206,8	706	178,0	1,22	4,16	1,05	169,8	1,08	5,00

Model

Designation	TL5G	220-240V/50Hz	Conf. 4	Sales code:	102G4550

Configuration

Motorconfiguration	CSIR
Power supply (nominal)	220-240V/50Hz 1~
Refrigerant	R513A
Application	LBP+MBP+HBP
Voltage range	187-254V
Starting torque	HST
Approvals	VDE
	CCC

Electrical accessories / wiring diagram

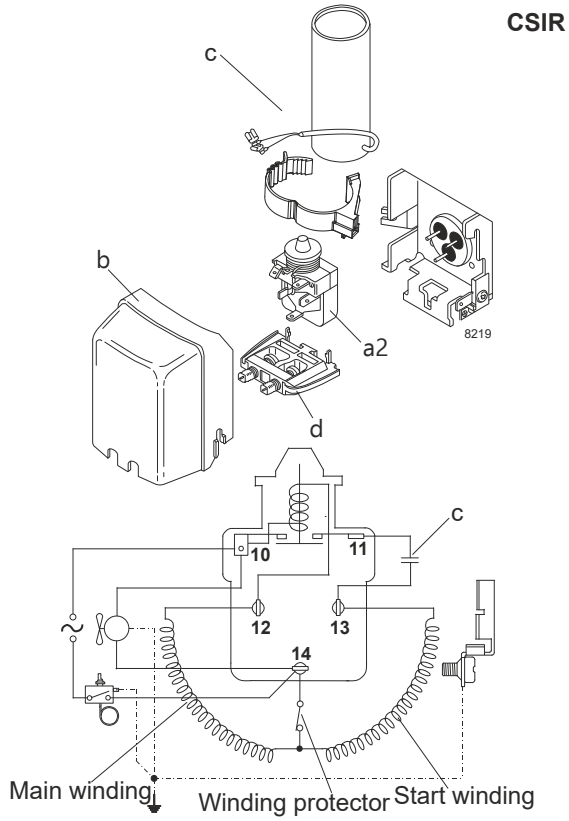

Components

a2	relay	117U6000
c	start capacitor (60µF)	117U5014
d	cord relief	103N1010
b	plastic cover	103N2010

Alternative components

b	plastic cover	103N2011

Ambient temperatures / system cooling

Ambient temperature min.:	10°C / 50°F
Ambient temperature max.:	43°C / 110°F

System cooling (n/a: outside limits)

T ambient	LBP	MBP	HBP
32°C / 90°F	static	static	fan 3m/s
38°C / 100°F	static	static	fan 3m/s
43°C / 110°F	static	static	fan 3m/s

Operation pressure range

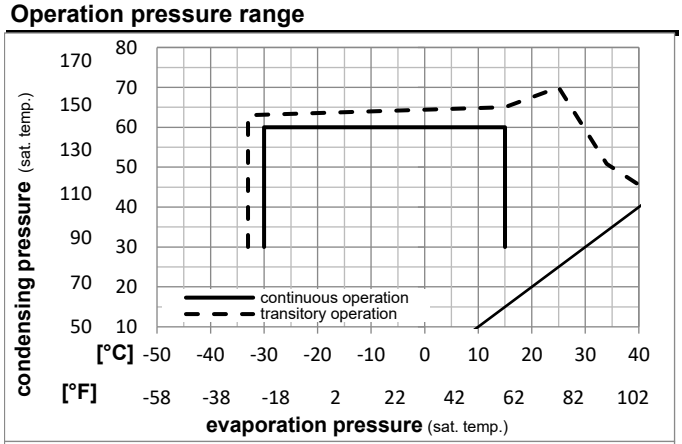

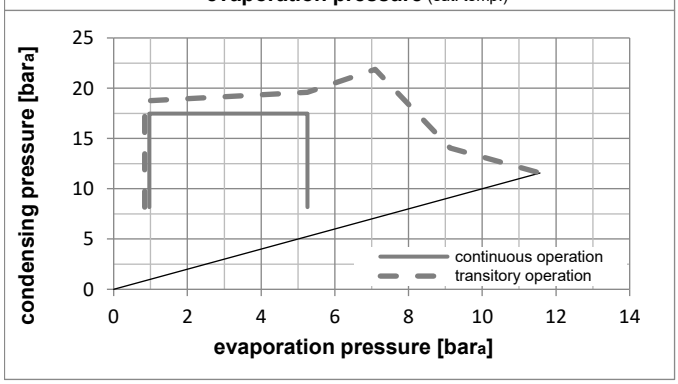

Model

Designation	TL5G	220-240V/50Hz	Conf. 4	Sales code:	102G4550

Optimization + standard conditions R513A, 220V/50Hz, CSIR, static, VDE, CCC

	pe (Evaporating pressure (saturation temperature))	pc (Condensing pressure (saturation temperature))	RGT (Return gas temp.)	Tliq (Liquid temp.)	Cooling capacity [W]	[Btu/h]	[kcal/h]	COP [W/W]	EER [Btu/Wh]	[kcal/Wh]	P1 (Power consumption) [W]	I (Current consumption) [A]	ṁ (Ref. mass flow) [kg/h]	
[°C]	-23	54	32	32	120,9	413	104,1	1,06	3,62	0,91	113,9	1,00	2,60	ASHRAE LBP
[°F]	-10	130	90	90										
[°C]	-25	55	32	55	85,8	293	73,9	0,79	2,69	0,68	108,9	0,99	2,35	cecomaf LBP
[°F]	-13	131	90	131										
[°C]	-35	40	20	40	60,7	207	52,2	0,75	2,58	0,65	80,4	0,90	1,50	EN12900 LBP
[°F]	-31	104	68	104										
[°C]	-7	54	35	46	242,4	828	208,6	1,42	4,87	1,23	170,1	1,17	5,94	ASHRAE MBP
[°F]	20	130	95	115										
[°C]	-10	55	32	55	185,4	633	159,6	1,17	3,99	1,00	158,9	1,14	5,13	cecomaf MBP
[°F]	14	131	90	131										
[°C]	-10	45	20	45	209,8	716	180,5	1,41	4,81	1,21	149,0	1,11	5,56	EN12900 MBP
[°F]	14	113	68	113										

Performance tables R513A, 220V/50Hz, CSIR, static, VDE, CCC

	pe [°C]	pe [°F]	Cooling capacity [W]	[Btu/h]	[kcal/h]	COP [W/W]	EER [Btu/Wh]	[kcal/Wh]	P1 [W]	I [A]	m [kg/h]
[°C / °F]	-30	-22	77,7	265	66,8	0,84	2,86	0,72	92,7	0,94	1,89
cond. pressure	-25	-13	104,2	356	89,7	0,98	3,36	0,85	105,9	0,98	2,54
pc= 45/113	-15	5	174,2	595	149,9	1,30	4,44	1,12	134,1	1,06	4,27
return gas temp.	-10	14	219,4	749	188,8	1,47	5,03	1,27	149,0	1,11	5,39
RGT= 32/90	0	32	334,6	1143	287,9	1,86	6,34	1,60	180,3	1,20	8,30
liquid temp	5	41	406,3	1387	349,6	2,07	7,06	1,78	196,6	1,25	10,13
Tliq= 45/113	15	59	582,3	1989	501,2	2,53	8,64	2,18	230,3	1,35	14,73
[°C / °F]	-30	-22	62,0	212	53,4	0,66	2,26	0,57	93,7	0,94	1,69
cond. pressure	-25	-13	85,8	293	73,9	0,79	2,69	0,68	108,9	0,99	2,35
pc= 55/131	-15	5	146,7	501	126,2	1,04	3,54	0,89	141,6	1,08	4,04
return gas temp	-10	14	185,4	633	159,6	1,17	3,99	1,00	158,9	1,14	5,13
RGT= 32/90	0	32	284,1	970	244,5	1,45	4,97	1,25	195,3	1,25	7,93
liquid temp	5	41	345,7	1181	297,5	1,61	5,51	1,39	214,4	1,30	9,71
Tliq= 55/131	15	59	497,8	1700	428,4	1,96	6,69	1,69	254,0	1,42	14,22

Model

Designation	TL5G	208-230V/60Hz	Conf. 5	Sales code:	102G4550

Configuration

Motorconfiguration	CSIR
Power supply (nominal)	208-230V/60Hz 1~
Refrigerant	R513A
Application	LBP
Voltage range	198-253V
Starting torque	HST
Approvals	VDE
	CCC

Ambient temperatures / system cooling

Ambient temperature min.:	10°C / 50°F
Ambient temperature max.:	43°C / 110°F

System cooling (n/a: outside limits)

T ambient	LBP	MBP	HBP
32°C / 90°F	static	n/a	n/a
38°C / 100°F	static	n/a	n/a
43°C / 110°F	static	n/a	n/a

Operation pressure range

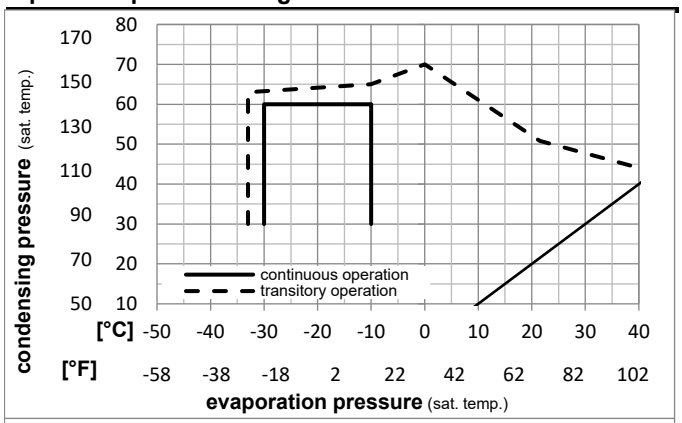

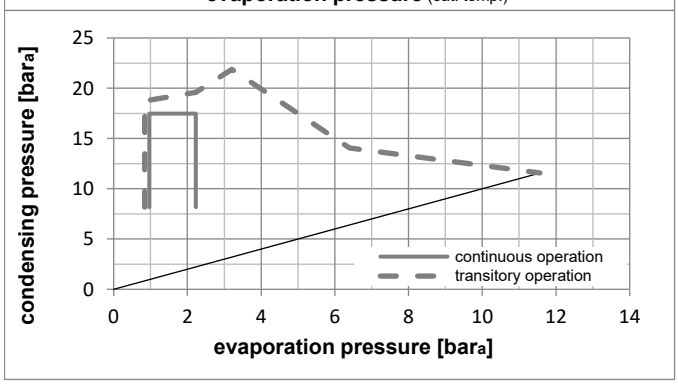

Electrical accessories / wiring diagram

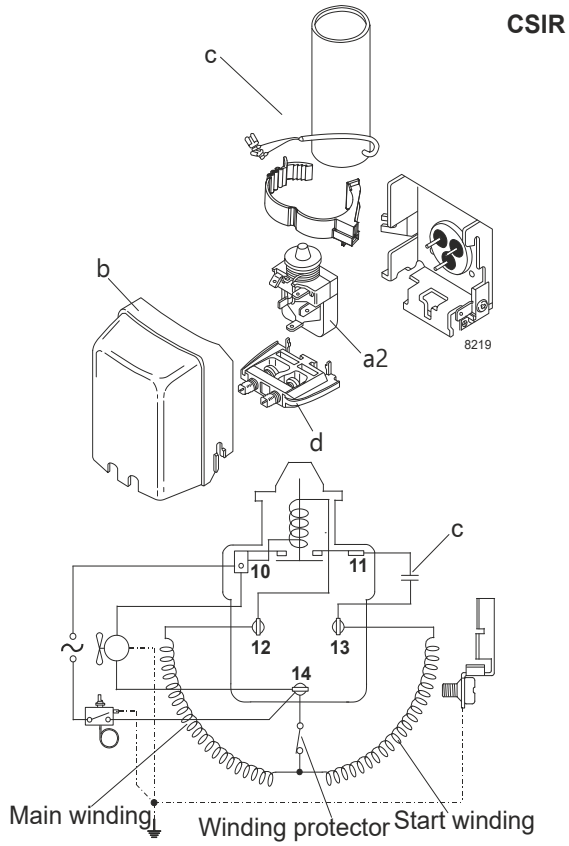

Components

a2	relay	117U6000
c	start capacitor (60µF)	117U5014
d	cord relief	103N1010
b	plastic cover	103N2010

Alternative components

b	plastic cover	103N2011

Model

Designation	TL5G	208-230V/60Hz	Conf. 5	Sales code:	102G4550

Optimization + standard conditions R513A, 230V/60Hz, CSIR, static, VDE, CCC

	pe (Evaporating pressure (saturation temperature))	pc (Condensing pressure (saturation temperature))	RGT (Return gas temp.)	Tliq (Liquid temp.)	Cooling capacity [W]	Cooling capacity [Btu/h]	Cooling capacity [kcal/h]	COP [W/W]	EER [Btu/Wh]	EER [kcal/Wh]	P1 (Power consumption) [W]	I (Current consumption) [A]	ṁ (Ref. mass flow) [kg/h]	
[°C]	-23	54	32	32	140,1	479	120,6	1,14	3,91	0,98	122,5	0,94	3,02	**ASHRAE LBP**
[°F]	-10	130	90	90										
[°C]	-25	55	32	55	99,3	339	85,5	0,86	2,92	0,74	116,2	0,92	2,72	**cecomaf LBP**
[°F]	-13	131	90	131										
[°C]	-35	40	20	40	72,4	247	62,3	0,87	2,97	0,75	83,4	0,79	1,79	**EN12900 LBP**
[°F]	-31	104	68	104										
[°C]	-7	54	35	46	280,7	959	241,6	1,43	4,87	1,23	196,8	1,23	6,88	**ASHRAE MBP**
[°F]	20	130	95	115										
[°C]	-10	55	32	55	215,1	734	185,1	1,18	4,04	1,02	181,7	1,17	5,95	**cecomaf MBP**
[°F]	14	131	90	131										
[°C]	-10	45	20	45	241,5	825	207,9	1,42	4,86	1,22	169,8	1,13	6,40	**EN12900 MBP**
[°F]	14	113	68	113										

Performance tables R513A, 230V/60Hz, CSIR, static, VDE, CCC

	pe [°C]	pe [°F]	Cooling capacity [W]	Cooling capacity [Btu/h]	Cooling capacity [kcal/h]	COP [W/W]	EER [Btu/Wh]	EER [kcal/Wh]	P1 [W]	I [A]	m [kg/h]
[°C / °F]	-30	-22	91,9	314	79,1	0,94	3,20	0,81	97,9	0,84	2,23
cond. pressure	-25	-13	122,5	418	105,4	1,07	3,65	0,92	114,5	0,91	2,98
pc= 45/113	-23	-10	134,2	458	115,5	1,11	3,80	0,96	120,5	0,93	3,27
return gas temp.	-20	-4	158,9	543	136,8	1,20	4,10	1,03	132,5	0,98	3,88
RGT= 32/90	-18	0	177,0	605	152,3	1,26	4,30	1,08	140,6	1,01	4,33
liquid temp	-15	5	202,0	690	173,9	1,34	4,57	1,15	151,1	1,05	4,95
Tliq= 45/113	-10	14	252,6	863	217,4	1,49	5,08	1,28	169,8	1,13	6,21
[°C / °F]	-30	-22	72,0	246	62,0	0,73	2,50	0,63	98,6	0,85	1,97
cond. pressure	-25	-13	99,3	339	85,5	0,86	2,92	0,74	116,2	0,92	2,72
pc= 55/131	-23	-10	109,7	375	94,4	0,89	3,05	0,77	122,8	0,94	3,01
return gas temp	-20	-4	131,7	450	113,4	0,97	3,30	0,83	136,3	0,99	3,62
RGT= 32/90	-18	0	147,8	505	127,2	1,01	3,46	0,87	145,8	1,03	4,06
liquid temp	-15	5	170,0	581	146,3	1,07	3,67	0,92	158,4	1,08	4,68
Tliq= 55/131	-10	14	215,1	734	185,1	1,18	4,04	1,02	181,7	1,17	5,95