BDnano Compressor

SECOP

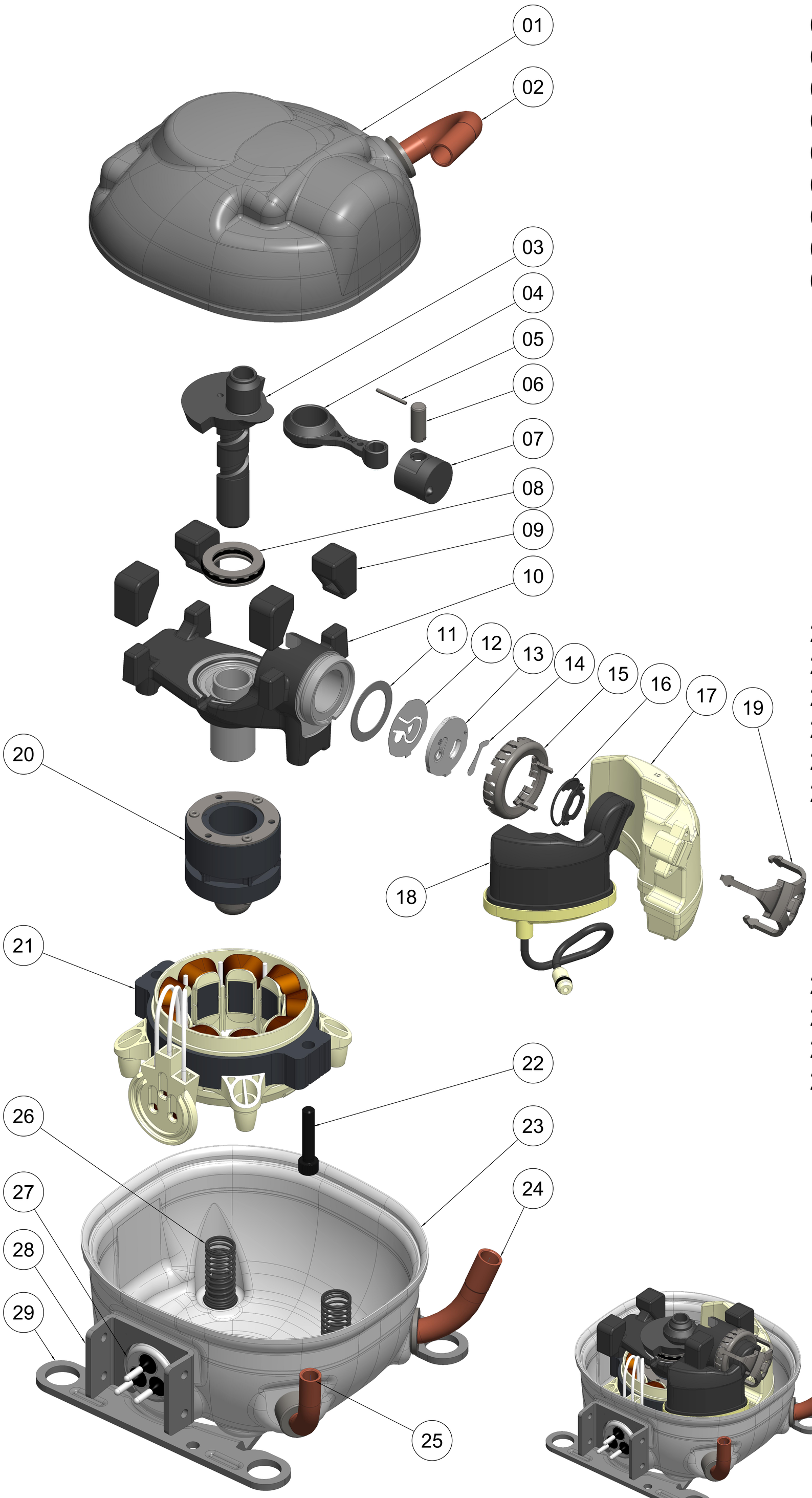

01 - Compressor cover
02 - Suction connector
03 - Crankshaft
04 - Conrod
05 - Clamping sleeve
06 - Piston pin
07 - Piston
08 - Ball bearing
09 - Transport stopper
10 - Crankcase
11 - Valve plate gasket
12 - Suction valve
13 - Valve plate
14 - Discharge valve
15 - Clamping element
16 - Muffler gasket
17 - Suction muffler
18 - Discharge muffler with tube
19 - Fixing element
20 - Rotor with oil pump
21 - Stator
22 - Stator screw
23 - Compressor housing
24 - Service connector
25 - Discharge connector
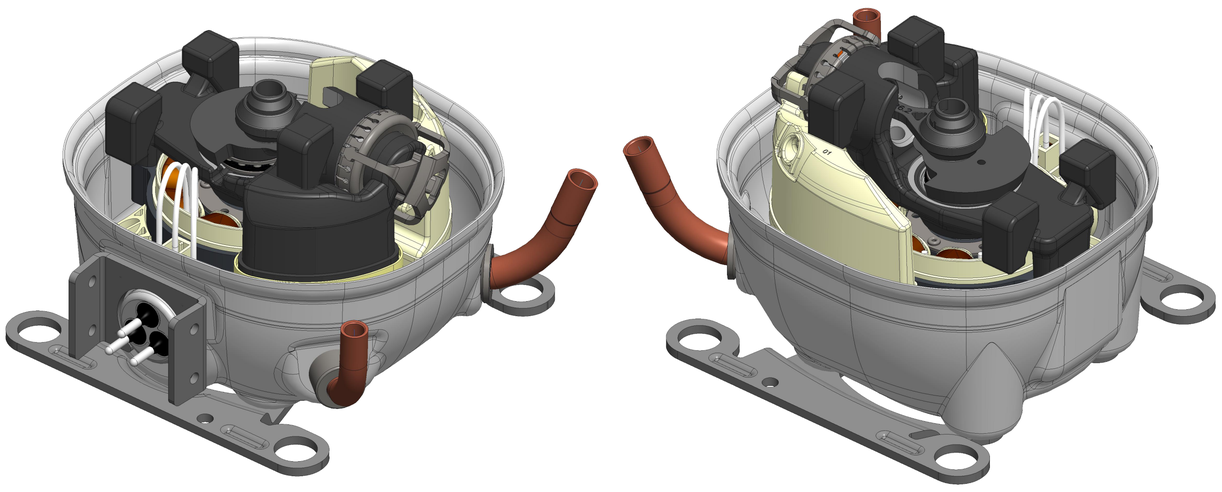
26 - Suspension spring
27 - Hermetic terminal
28 - Hermetic terminal plate
29 - Base plate