R134a | R1234yf · 12–24 V DC

THE NEW GEN COOLING SOLUTION FOR AUTOMOTIVE REFRIGERATION

SECOP



BD Nano Automotive – BDN45F-A.3

Mobile Applications





Variable-Speed Efficiency

Premium Controller

Low Noise Low Vibration

Low GWP Refrigerant

Small Footprint

→ **Compact, Efficient, and Silent Design**
The BD Nano new-generation automotive compressor has a height of 93 mm and weighs only 1.38 kilograms, making it ideal for car (w. internal combustion engine), EV, truck, and bus refrigerators by maximizing space for food and drinks. Its efficiency ensures low energy consumption, extended battery life, and an optimized total cost of ownership. Acoustics & comfort (NVH): the compressor enhances acoustic comfort thanks to a redesigned suction muffler and Field-Oriented Control (FOC) motor drive electronics, reducing knocking noise and vibration by -4 dBA in running noise and -6 dBA in vibration, making it suitable for noise-sensitive applications. The BD Nano is more powerful than similar predecessors, e.g. the BD Micro.

→ **Proven Robustness and Incline Stability**
The BDN45F-A.3 compressor complies with the ISO16750 standard on improved transport stability, featuring extended incline tolerance (+6°), a redesigned new shell, and FOC to ensure continuous refrigeration at extreme tilt without contact noise. Furthermore, the process connector position has been lifted 18 mm higher to enable an improved vacuum process.

→ **Enhanced EMC Performance**
Complies with CISPR 25 Class 5 EMI without additional measures or filters needed for the compressor controller across the full platform from EV to ICE cars and trucks.

→ **Produced in IATF16949-certified Plant**
BDN45F-A.3 compressors are manufactured at the Secop's plant in Tianjin, China. This facility has been IATF16949-certified and complies with the strict standards of the automotive industry.

Secop's **BDN45F-A.3** is the next-generation automotive compressor engineered for R134a and R1234yf, with functions maximized and refined for Truck, Bus, ICE car, and EV applications. It delivers **premium cooling performance, high efficiency, and low noise and vibration levels in a compact design**.
Its significantly reduced power consumption allows multiple refrigeration units, such as a drawer fridge and a main fridge, to operate from a single vehicle battery without overloading the electrical system. The compressor is controlled by a **new-generation electronic control unit** (ECU) featuring Secop's unique control algorithm for efficient and silent motor operation. The ECU includes an industry-standard LIN interface for real-time operational data exchange and is **significantly smaller and lighter than previous Secop BD Nano Automotive control units**, with an ECU housing 10 mm thinner and lighter for more compartment space and easier installation in tight spaces. Automotive-grade electrical interface: connection is via a dedicated plug-in connector that combines all cables and is fully suitable for automotive applications, including connector position assurance (CPA) and terminal position assurance (TPA) locking for secure, vibration-proof connections and faster, standardized harness assembly. The new optimized ECU offers a multivoltage 12/24 V input range and plug-and-play compatibility with Secop's BD Nano Automotive Modbus interface. It includes Secop's **proven battery protection, an integrated tilt sensor, and a fully configurable thermostat** with rapid temperature response. Its stepless, state-of-the-art FOC motor control optimization ensures load-matching, high system efficiency, and silent operation. Easy controller customization via Tool4Cool® software or Modbus communication interface.

General	BDN45F-A.3	
Refrigerant	R134a, R1234yf	
Compressor (1.37 kg)	109Z0740*	*preliminary data
Electronic unit (0.072 kg)	101N3000	

Application		
Application		LBP/MBP
Evaporating temperature	°C	12 V DC: -30 to 0 | 24 V DC: -30 to -5
Voltage range	VDC	8.5–17 / 19–34
Speed range	rpm	12 V DC: 2300-4000 | 24 V DC: 2300-4500

Performance Data ASHRAE LBP		BDN45F-A.3 @ 12 V DC	BDN45F-A.3 @ 24 V DC
Speed	rpm	Performance data will be available soon; the compressor is still under development.	
Cooling capacity	W		
Power consumption	W		
COP	W/W		
Test conditions @ -23.3 °C evaporating temperature		Condensing temp.: 54.4 °C | Suction gas temp.: 32.2 °C | Ambient temp.: 32.2 °C | Liquid temp.: 32.2 °C BDN45F-A.3 performance data measured with R1234yf (R134a values similar)	

Performance Data ASHRAE MBP		BDN45F-A.3 @ 12 V DC	BDN45F-A.3 @ 24 V DC
Speed	rpm	Performance data will be available soon; the compressor is still under development.	
Cooling capacity	W		
Power consumption	W		
COP	W/W		
Test conditions @ -6.7 °C evaporating temperature		Condensing temp.: 54.4 °C | Suction gas temp.: 35 °C | Ambient temp.: 32.2 °C | Liquid temp.: 46.1 °C BDN45F-A.3 performance data measured with R1234yf (R134a values similar)	

Dimensions			
Height	mm	A	89.0
		B / B1 / B2	81.9 / 48.7 / 45.8
Suction connector	location/I.D. mm | angle material | seal	C	6.2 | 5° Copper | Rubber plug
Process connector	location/I.D. mm | angle material | seal	D	6.2 | 77.9° Copper | Rubber plug
Discharge connector	location/I.D. mm | angle material | seal	E	5.0 | 86.9° Cu-plated steel | Rubber plug
Connector tolerance	I.D. mm		±0.09, on 5.0 +0.12/+0.20

Electronic Unit Features	
32-bit STM32 microcontroller	Modern and robust instruction set microcontroller · proven reliability in several Secop products
LIN communication hardware	Standard transceivers · robust against ground voltage shift and EMI · Modbus protocol
State of the art hardware design	Modern components w. proven track record · automotive connector with CPA and TPA · CISPR 25 Class 5
Acoustically optimized design	Vibration damped housing · Field-Oriented Control (FOC) motor drive electronics· reduced size and weight
Tailor made	Reduced complexity and cost for a master-slave car refrigerator system

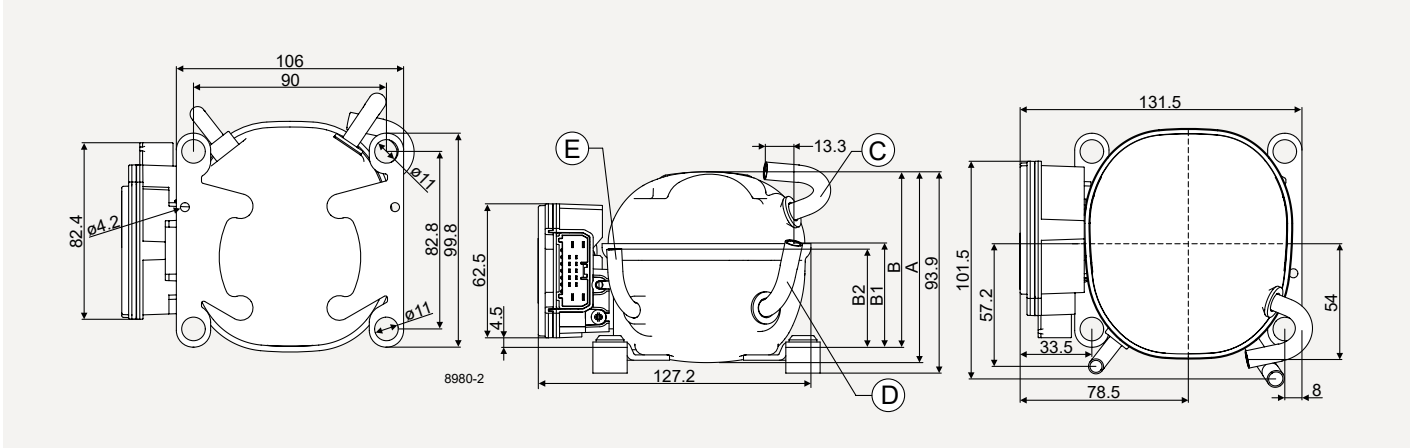

Secop GmbH · Lise-Meitner-Str. 29 · 24941 Flensburg, Germany · Tel: +49 461 4941 0 · **www.secop.com**

Secop accepts no responsibility for possible errors in catalogs, brochures, and other printed material. Secop reserves the right to alter its products without notice. This also applies to products already on order provided that such alterations can be made without subsequential changes being necessary to specifications already agreed. All trademarks in this material are the property of the respective companies. Secop and the Secop logotype are trademarks of Secop GmbH. All rights reserved.

Produced by Secop | November 2026

DES.N.101.R2.02